Carnegie Mellon University
Research Showcase

Department of Chemical Engineering | Carnegie Institute of Technology

1-1-1996

Synthesis of optimal chemical reactor networks

Ajay Lakshmanan
Carnegie Mellon University

Lorenz T. Biegler

Carnegie Mellon University.Engineering Design Research Center.

Follow this and additional works at: http://repository.cmu.edu/cheme

Recommended Citation
Lakshmanan, Ajay; Biegler, Lorenz T.; and Carnegie Mellon University.Engineering Design Research Center., "Synthesis of optimal chemical reactor networks" (1996). *Department of Chemical Engineering.* Paper 227.
http://repository.cmu.edu/cheme/227

This Technical Report is brought to you for free and open access by the Carnegie Institute of Technology at Research Showcase. It has been accepted for inclusion in Department of Chemical Engineering by an authorized administrator of Research Showcase. For more information, please contact research-showcase@andrew.cmu.edu.

NOTICE WARNING CONCERNING COPYRIGHT RESTRICTIONS:
The copyright law of the United States (title 17, U.S. Code) governs the making of photocopies or other reproductions of copyrighted material. Any copying of this document without permission of its author may be prohibited by law.

Synthesis of Optimal Chemical Reactor Networks

Ajay Lakshmanan and Lorenz T. Biegler

EDRC 06-220-96

SYNTHESIS OF OPTIMAL CHEMICAL REACTOR NETWORKS

Ajay Lakshmanan and Lorenz T. Biegler*

Department of Chemical Engineering and

Engineering Design Research Center

Carnegie Mellon University

Pittsburgh, Pa 15213

Abstract

The reactor is the most influential unit operation in many chemical processes. Reaction systems and reactor design often determine the character of the flowsheet. However, research in reactor network synthesis has met with limited success because of nonlinear reaction models, uncertain rate laws, and numerous possible reactor types and networks. In this paper we take advantage of attainable region properties derived from geometric targeting techniques to design a concise reactor modules for reactor network synthesis. The reactor module is made up of a continuous stirred tank reactor (CSTR) and a plug flow reactor (PFR) (for two dimensional targeting) or a differential sidestream reactors (DSR) (for higher dimensions). These modules are used to synthesize the optimal reactor network target with respect to a specific objective function and the problem is formulated as a compact MINLP. This new algorithm overcomes many of the drawbacks of existing algorithms. Finally, we solve several example problems to illustrate the feasibility of the proposed algorithm and discuss applications to simultaneous reactor network and process synthesis.

1. Introduction

The essence of reactor network synthesis is to find optimal reactor types, sizes and arrangements which will optimize a specific objective function. Two significant mathematical programming strategies for synthesis of reactor networks are superstructure optimization and targeting. In superstructure optimization a fixed network of reactors is postulated and an optimal subnetwork which maximizes the performance index is derived.

*** Author to whom correspondence should be addresses. E-Mail: biegler@cmu.edu. FAX: (412) 268-5229**

This approach may be suboptimal since the solution obtained is only as rich as the initial superstructure chosen and it is difficult to ensure that all possible networks are included in the initial superstructure. In targeting, an attempt is made to find an achievable bound on the performance index of the system irrespective of the actual reactor configuration. A general functional representation is used to model the entire variety of reaction and mixing states. Bounds are then derived based on limits posed by reaction kinetics on the space of concentrations available by reaction and mixing. Other mathematical programming strategies which have been used to synthesize reactor networks include dynamic programming and the state space approach. A brief review of superstructure optimization and targeting is given in the next section, a more extensive review on reactor network synthesis can be found in Hildebrandt and Biegler (1995).

1.1 *Superstructure Optimization*

Jackson(1968) postulated a reactor superstructure made up of plug flow reactors (PFR) connected by side streams. Adjoint relations were used to model the effect of flow in the side streams on the concentration of species at the exit of the reactor network. Chitra and Govind (1981, 1985 a&b) studied PFR systems with a recycle stream from an intermediate point along the reactor, they optimized the recycle ratio and the point of recycle. They suggested that this reactor system could model PFR's, CSTR's and recycle reactors. Later, they classified different reaction mechanisms and postulated a superstructure consisting of a series of recycle reactors with bypass streams and heat exchangers at the reactor inlets. The objective functions in these studies were primarily yield based.

Achenie and Biegler (1986,1988) allowed for component splits and postulated a series parallel combination of axial dispersion reactors (ADR). The decision variable was the dispersion coefficient in each ADR. An advantage of this approach was that more general reactor networks could be considered. Later, they postulated a superstructure of recycle reactors in series, this superstructure reduced the computational effort involved but was less general. Kokossis and Floudas (1989, 1990, 1991) considered a large superstructure of isothermal and nonisothermal networks of PFR's and CSTR's by modeling a PFR as the limit of a very large number of sub-CSTR's (CSTR's of equal size). Their MINLP formulation was free of differential equations. Later, the technique was extended to handle stability of reactor networks and integration with recycle systems. Their approach allows arbitrarily general network configurations but leads to large MINLP formulations. In this

study, we claim that by taking advantage of attainable region properties, a much smaller and simpler MINLP formulation results without loss of this generality.

1.2 *Attainable region targeting*

Targeting for reactor network synthesis is based on the concept of the "attainable region" in concentration space, which was suggested by Horn (1964). The attainable region is the convex hull of concentrations that can be achieved starting from the feed point by reaction and mixing. Recently, Glasser et al (1987) and Hildebrandt et al (1990) developed geometric concepts for reaction and mixing to map the entire region in the concentration space that is attainable from a given feed concentration. Alternate plug flow reactor (PFR) and continuous stirred tank reactor (CSTR) trajectories were drawn to cover the attainable region and derive an optimal reactor network. Although this is a rigorous and elegant method, the geometric techniques are difficult to apply beyond three dimensions. However, Feinberg and Hildebrandt (1992) show that the geometric insights gained from these attainable region concepts apply to all dimensions and are therefore quite useful for general problems.

Balakrishna and Biegler (1992 a, b) (B&B) adapted the geometric technique for targeting to a math programming based framework. They proposed a general targeting procedure based on optimizing flows between regions of segregation (PFR) and maximum mixedness as a mixed integer dynamic optimization problem. A simplified form of this model based on the segregated flow limit (PFR) was postulated as a linear program for yield and selectivity based objective functions. Reactor extensions which could be an additional CSTR or PFR were considered; this was done by solving a nonlinear programming problem. If the objective improved then the reactor extension was necessary for the network, else the optimal network was assumed to be found. Since this is an optimization based procedure it overcomes the dimensionality problem of the geometric technique and could be extended to nonisothermal systems where the temperature profile is an additional control profile. The essence of the B&B targeting strategy involves:

(1) *postulate an initial family of solutions. (In* B&B, a segregated flow network was assumed, which allowed a linear programming formulation.)

(2) *optimize the objective with respect to the target chosen:*

(3) *consider reactor extensions to the candidate solution* (which could be CSTR, PFR or recycle reactor extensions) from the initial target and examine if the reactor

extensions improve the objective. If a reactor extension improves the objective then additional reactor extensions must be considered;

Typical PFR and CSTR formulations are shown in Table 1. Later, B&B incorporated analytical expressions for minimum utility consumption (B&B, 1992b; Duran and Grossmann, 1986) to consider simultaneous energy integration of reactor networks. The problem was formulated as a nondifferentiable nonlinear program (NLP). The nondifferentiable max operators involved in the pinch locating constraints were handled using hyperbolic approximations. Simultaneous reaction and energy synthesis was found to be significantly more profitable than sequential synthesis. B&B (1993) also developed a targeting model for reaction, separation and energy management. The separation network was modeled as sharp splits occurring at the end of each discretized reactor element. Intermediate degrees of separation were modeled as a sharp split followed by mixing with the exit stream from the reactor. Hence, this model requires downstream separation units for component recovery from the system.

The B&B algorithm is simple to apply and yields reactor networks in a straightforward manner. It is a constructive technique which maximizes or minimizes the objective at each stage, but it suffers from a drawback in step 3. Here, if the improvement in the objective function is nonmonotonic, the algorithm could yield suboptimal results. In order to comprehend this problem, consider the candidate attainable regions given by the thick and thin lines (Figure 1) with points B and C representing the best objectives in each. Here the B&B algorithm would first locate point B and if it finds no further extensions from B, it would stop. However, from the other candidate attainable region with a lower objective value (point C), an extension, represented by the dotted line, can be found yielding the optimal point A. Our intention is to develop an optimization based algorithm that will find this point. In addition, the B&B algorithm does not account directly for parallel reactor structures or bypasses in the optimal network.

2. Algorithm for Reactor Network Synthesis

Motivated by the disadvantages of previous strategies, we propose a combination of these two techniques to yield optimal reactor networks. A constructive optimization based technique which considers multiple reactor paths at each stage, by targeting the attainable region using reactor modules, is proposed. A lower bound on the objective is first established by solving a segregated flow model from the feed. The results are used to initialize the main problem which is formulated as a mixed integer nonlinear program

(MINLP). Also, general reactor structures like the differential sidestream reactor (DSR) which may occur in higher dimensional reactor network synthesis have been included. In order to keep the MINLP as compact as possible, the following attainable region properties are incorporated into it. We therefore take advantage of the following attainable region properties derived from previous studies.

2.1 *Attainable region properties*

We first summarize and extend some properties of attainable regions when mixing and reaction are allowed. These have been derived and applied by Glasser and coworkers and by Feinberg and Hildebrandt (1992). The MINLP formulation that we develop later in this section will make direct use of these properties.

1) ***PFR trajectories do not intersect.*** **A PFR trajectory has a rate vector tangent to the reactor trajectory at every point and we assume that the rate vector is unique at every point. Hence, PFR trajectories cannot intersect ench other (HiMoHn^ri? *wd Glasser, 1990).**

2) ***The attainable region is formed by PFR trajectories and straight lines.*** **This property was shown by Feinberg and Hildebrandt (1992). As a result, the boundary of the attainable region is made up only of PFR reactors and their intersections with straight line segments. These segments are either due to mixing, or in the case when the intersections are smooth, they can be CSTRs or DSRs.**

?) *The recycler, annr and.-: vlohrri recycle around a network of reactors are not part* ***of the attainable region boundary.*** **A candidate region for a recycle network can always be extended by CSTR's, PFR's and/or mixing lines. This property was shown for the single recycle reactor in Hildebrandt (1990). For a reactor network in a recycle loop, we note that the attainable region must at least be the convex hull of this system and the recycle system itself is strictly inside this convex hull. A simple illustration of this property is given in Appendix A.**

4) *For the space represented by N independent variables (concentration, temperature, residence time etc.) any point on the boundary of the attainable region may be achieved by N parallel reactor structures and any point on the interior may*

be achieved by N+l parallel reactor structures (Feinberg and Hildebrandt, 1992). **This property is illustrated in two dimensions in Appendix A.**

5) *In 2-dimensional reactor network synthesis the attainable region is mapped by CSTR's and PFR's only* (Hildebrandt et al, 1990). *In 3-dimensional systems the attainable region is mapped by CSTR's, PFR*s and DSR*s* (Glasser et al 1992).

These properties imply that any point in the attainable region may be achieved by a combination of CSTR, PFR and DSRs. NLP models for PFR's and CSTR's have been derived in the studies cited above. Also, the use of feed addition as a means of temperature manipulation resulted in models for cold shot cooling reactors (Lee and Aris, 1963) and cross flow reactors (Balakrishna and Biegler, 1992b) and these are specific instances of DSRs. For completeness, we next develop a general DSR model for the building blocks needed in our MINLP formulation.

2.2 *DSR model:*

A Differential Sidestream Reactor is a PFR with sidestream addition along the length of the reactor, as illustrated in Figure 2. Here, Qside. Qin* Qexit and $X_s$ide> Xi_n, $X_e$xit are the sidestream, feed and exit flowrates and concentrations, respectively. In this model we assume that the sidestream composition remains constant along the length of the reactor and instantaneous mixing between the sidestream and the reactor stream occurs. Let a represent distance along the length of the reactor and consider a segment 5a, f(a)5a is the fraction of Qexit (i-c. Qside + Qin) which leaves the reactor between a and a+Sa. Here, let q(a) 5a be the fraction of Qside entering the reactor between a and a + 5a and let Q(a) be the total molar flow at a (for simplicity we consider constant density systems, although variable density systems may be considered by a straightforward extension). A differential mass balance on 5a yields equation (2.1) and the NLP model may be formulated as in P2.1.

$$\max_{q,\ f,T} \quad J(XDSR\ exit,\ t) \qquad \text{(P2.1)}$$

$$dX/da = R(X(a), T(a)) + (q(a)\ Qside / Q(a))\ (X_s ide - X(a)) \qquad (2.1)$$

$$X(0) = Xfeed + q(0)\ Xside \qquad (2.2)$$

$$XDSR\ exit = {}_0r\ f(a)\ X(a)\ da \qquad (2.3)$$

$$1 = \int_0^\infty f(x)\, da \tag{2.4}$$

$$1 = \int_0^\infty q(a)\, da \tag{2.5}$$

$$x = \int_0^\infty J^a (q(a')\, Q_{side} / Q_{exit} - f(a^f))\, da \tag{2.6}$$

$$TDSR_{exit} = \int_0^\infty f(a)\, T(a)\, da \tag{2.7}$$

where R(T(a), X(a)) is the temperature dependent rate of reaction, and X(a) and T(a) are the mass concentrations and temperature at a, respectively. Here, XQSRexit and TDSRexit are the mass concentration and temperature at the exit of the DSR and x is the mean residence time in the DSR. Equations (2.1) and (2.2) are the differential equation and initial conditions to the DSR. Equation (2.3) is the mean outlet concentration from the DSR, equations (2.4) and (2.5) are the normalization equations for f and q. The last two equations (2.6) and (2.7) give the mean residence time distribution and exit temperature for the DSR:

This is an optimal control problc;:: where the control profiles are q, i" und T. The problem is simplified by discretizing the reactor into elements with finite mixing points in between as shown in Figure 3. This approximates the DSR by the set of differential equations for the i* reacting segment:

$dX_j/da = R(X_i(a), T_j(a))$ over $a_j \le a < a_{i+1}$, with $X_j(a_i) = X_{i-1} + \phi_i Q_{side} X_{side}$
Here ϕ_j is the fraction of the flow added at the i^{*1} reacting element inlet and $\phi_i Q_{side}$ is a discrete approximation to $q(a)Q_{side}/Q(o0)$ in (2.1). This DSR representation simplifies to the cold shot cooling reactor or cross flow reactor, proposed by Balakrishna and Biegler (1992b). when the sidestrcam conditions are identical to those of the feed stream.

We next discretize the differential equations in each reacting segment by using orthogonal collocation, with NE reacting segments or elements and K collocation points in each element. Figure 3 shows the discretized model, where the subscript m denotes the i^{*1} reacting element and j denotes the j^{1*1} collocation point. Over each finite element, the concentration, X(a), and the other profiles, are approximated by a piecewise polynomial represented by Lagrange basis functions (Lk(a)) and defined as:

$$X(a) = \sum_{k=0}^{K} X_{ik} L_k(a) \text{ for } a_i < a < a_{j+1}. \text{ and. } L_k(a) = \prod_{i=0;k}^{K} \left[\frac{a - a_i}{a_k - a_i}\right]$$

By substituting these polynomial approximations and writing the differential equations only at the collocation points. Formulation P2.1 may now be reformulated as an NLP (P2.2)

$$\max_{\phi_i\, f_{ij}\, T_i} \quad J(X_{ex}it,t) \qquad \text{(P2.2)}$$

$$Z_k Xik\ LkXap - R(Xjj\ Tip\ Aaj = 0 \qquad j=l,K \qquad (2.8)$$

$$X(0) = (1-40)\ Xfeed + 40\ X_s ide \qquad (2.9)$$

$$X_{i\,end} = \sum_k X_{ik}\, L_k(\alpha_{i+1}) \qquad (2.10)$$

$$XiO = 4i\ Xside + 0\text{-}4i)\ Xi\text{-}lend \qquad (2.11)$$

$$XDSR\ exit = \sum_j 22>\dot{M}^f ij \qquad (2.12)$$

$$\textbf{TDSR}\ exit = \sum_i \sum_j I^\wedge T\ddot{U}^f\ddot{U} \qquad (2.13)$$

$$\sum_i \sum_j fij = 1 \qquad \sum_j qij = i \qquad (2.14)$$

$$\sum_j Ilaij\ (fij - qij\ Qside/Qexit) = t \qquad (2.15)$$

$$4iQil = qilQside \qquad (2.16)$$

$$Qij = Qin + \sum_j H\ (qijQside - fijQtotal) \qquad (2.17)$$

$$0 \le 4j \le 1$$

Here Xy is the concentration at collocation point j in element i, **Lk'(ctj)** is the derivative of the Lagrange basis polynomial evaluated at ctjj, and Xjend is the concentration at the end of finite element i. Act) is the length of finite element i, Qij, qij, fjj and Tjj are the volumetric flow rate, the fraction of the sidestream flow entering, the exit flow distribution and temperature at (i,j) respectively. The orthogonal collocation equations applied to the differential equations at the K collocation points are shown in Equation (2.8). Equation (2.9) is the concentration entering the first element. Equation (2.10) evaluates the value of Xjend. at the end of the ith element, and equation (2.11) represents the inlet concentration at the ith reacting element as a mass balance between the mixing stream and the reacting stream. Equations (2.12) and (2.13) determine the exit concentration and temperature from the DSR and equations (2.14) and (2.15) represent the integrals (2.4) and (2.6) discretized using Gaussian quadrature (see Balakrishna and Biegler, 1992b). Finally, equation (2.16) determines <ti and the flowrate Qij is determined by equation (2.17). The solution of this NLP yields the optimal set of f, T and 4 over each element. Note that this model simplifies to a PFR whenever the 4i's are zero. The DSR model will now be incorporated into a more

general reactor module that will be used make up the MINLP formulation for reactor network synthesis.

2.3 *The Reactor Module*

The attainable region properties described in section 2.1 are used to postulate a reactor module, which can be linked with a forward connectivity to other modules. These properties suggest that the boundary of the attainable region is formed by PFR segments and straight lines. The reactor structures which need to be considered are PFR's and CSTR's when there are only two independent problem dimensions and PFR's, CSTR's and DSR's for higher dimensions. Recycle systems (both individual recycle reactors and global recycles around a network of reactors) need not be considered, and this reduces the complexity of the module. Hence a two dimensional reactor iriodule consists of a PFR and a CSTR, and for higher dimensional problems it is made up of a DSR and a CSTR (A separate PFR model need not be considered in higher dimensional problems since the DSR without the sidestream is a PFR). A typical reactor module is shown in Figure 4, and a binary variable is associated with each reactor path in a module. For instance, if the DSR is chosen in the ith reactor module, Yjd, the binary variable associated with it, is set equal to one. These reactor modules form the key part of the reactor network synthesis algorithm.

2.4 *Reactor network synthesis algorithm*

The problem is formulated as an MINLP (P2.3) below. Here we link the reactor modules shown in Figure 4 with a forward connectivity. These links lead to networks that have bypasses, serial structures and parallel structures embedded within them as shown in Figures 5 and 6. Note that this formulation does not contain recycle reactors or interunit recycles as these cannot form the boundary of the attainable region. Within the i* module we have the equations that describe both CSTRs and DSRs (or PFRs in the two dimensional case). The feeds to module i are made up of upstream reactions and bypasses, from modules k. The outlet streams of these modules are then passed downstream until the exit concentration, $X_e$xit> is determined. The resulting optimization problem is given by:

$$\text{(P2.3)} \qquad \begin{array}{l} \text{Max} \quad J(Xcxit,T) \\ \text{q.f.T} \end{array}$$

$$XcSTR(i) = R(XcSTR(i),TcSTR(i))\, t_C(i) + X_o\, i \qquad (2.18)$$

$$dX_DSR(i)/da=R(X«x)(i), T(\alpha_{(i)}))+(q(\alpha_{(i)}) Qside(i)/Qa(i))(X_side(i) - X(\alpha_{(i)})) \quad (2.19)$$

$$XDSRO(i) = X_o(i) \quad (2.20)$$

$$XDSRexit(i)= \int_0^{tmax} f(\alpha_{(i)}) X(\alpha_{(i)}) dct(i) \quad (2.21)$$

$$1 = \int_0^{tmax} f(ot(i)) da(i) \quad (2.22)$$

$$1 = \int_0^{tmax} q(ot(i)) da(i) \quad (2.23)$$

$$X = \int_0^{tmax} \int_0^{0} \wedge (q(\alpha(i)') Qside(i) / Qexit(i) - f(\alpha(i)')) d\alpha(i)' da(j) \quad (2.24)$$

$$TDSRexit(i) = \int^{tmax} f(\alpha_{(i)}) T(\alpha_{(i)}) dot(i) \quad (2.25)$$

$$Fif = \sum_{k=0}^{i-1} FRi-l \quad (2.26)$$

$$FjfXif = \sum_{k=0}^{i-1} Fid-iXk \quad (2.27)$$

$$Xif = Xj_c in = Xid in \quad (2.28)$$

$$Fif = F_{ic} + Fid \quad (2.29)$$

$$FjfXi= FjcXic+ F_{id} X_{id} \quad (2.30)$$

$$1 = Y_{ic} + Y_{id} \quad (2.31)$$

$$F_{if} X_i = \sum_{j=i}^{N} F_{ij} X_j \quad (2.32)$$

$$X_{exit} = X_{Nexit} \qquad 0 \le Fi_c \le U*Y_{ic} \qquad 0 \le Fid \le U*Y_{id} \qquad Y_{ic} e \{O,l\} \qquad Yid\ e\ \{0,1\}$$

Here Fjf is the flowrate at the inlet of the ith reactor module; **Fki-1** * Xki-1 are the flowrate and concentration from the exit of the kth stage, which is an inlet stream to the ith stage (k=0, i-1). Xif is the concentration at the inlet to the ith reactor module; Fjc, Fjd are the flowrates of the stream passing through the CSTR and DSR in the ith reactor module; Xjc in, Xjc, Xjd in. and Xjd are the concentration at the inlet and exit of the CSTR and DSR respectively in the ith reactor module. Finally, Xj is the concentration at the exit of the ith reactor module and Yj_c and Yjd are the binary variables associated with the CSTR and DSR in the ith reactor module. Equations (2.18)-(2.25) constitute the reactor module at stage i made up of a CSTR (2.18) and a DSR (2.19)-(2.25). The inlet conditions to the module

and the individual reactors are given by (2.26)-(2.29). Equation (2.30) represents the exit from the ith module and equation (2.31) ensures that only one among the two reactors is chosen in the ith module. The exit from the ith reactor module forms the inlet to any one or a combination of modules i+1 to N as shown in equation (2.32).

From Figures 5 and 6, serial structures may be easily visualized since the algorithm is a stepwise constructive technique. In Figure 5 the feed conditions (Fjf, Xjf) to i^1 module may be the exit conditions of any one or a combination of the previous i-1 modules. Equations (2.26) and (2.27) illustrate this fact. Hence when the ith reactor module extension is considered, bypasses from the exits of the previous i-2 modules and the feed are automatically considered. Similarly, parallel reactor structures up to the i-lth module are also accounted for. This structure keeps the constructive MINLP algorithm as compact as possible. In the i* reactor module either the CSTR or the DSR may be chosen and the exit conditions from the i**1 reactor module (Xj) are determined appropriately. This is represented by equations (2.28), (2.29) (2.30) and (2.31). The exit stream from the ith reactor module forms the inlet stream to any one or a combination of reactor modules i+1 to N (2.32). Figure 6 depicts the parallel structure; here the feed stream to the ith and i+1^ modules are identical and the exits of these modules combine to form the inlet to the 1+2* module. Similarly, up to N parallel structures may be realized where N is the number of reactor modules in the optimization.

The MINLP formulation can be solved directly using standard algorithms such as Outer Approximation or Generalized Benders Decomposition. Both approaches require alternate solutions of MILP and NLP subproblems. However, because (P2.3) is a nonconvex optimization problem, there is a possibility of finding snbopfimal solution *when* local NLP methods are applied. Avoiding this difficulty requires the application of global optimization methods (see, e.g., Floudas and Grossmann, 1995, for a review) and encouraging approaches for reactor networks are being developed (Pantelides and Smith, 1995). These methods, however, can still be very expensive for the large problems considered in this study. Instead, to ensure good solutions we solve an improving sequence of MINLP problems according to the following steps.

1) *Solve a segregated flow model to obtain a lower bound on the solution.* This formulation is usually a linear program with a guaranteed global solution (Balakrishna and Biegler, 1992a).

2) *Initialize the first reactor module with the solution obtained from step J and optimize it with respect to a specific objective.* The inlet conditions to the reactor module are the feed conditions. This yields an initial target to the attainable region. In addition, it does not eliminate the 'CSTR[1] path, but only makes it inactive with a zero binary variable.

3) *Extend the first module with an additional reactor module.* The feed to the second module is the exit from the first or a combination of the fresh feed and the exit of the first module. If this extension improves the objective then further extensions need to be considered else the optimal network is assumed to have been found.

4) *Ensure that the feed to the i*h reactor module extension may be the exit of any one or a combination of the exits of the previous i-1 modules or the initial feed.*

5) *Account for bypass streams* by ensuring that the exit from the ith reactor module plus the bypasses from the exits of any one or a combination of the previous i-1 modules form the inlet to the i+1* reactor module.

An additional disadvantage is that equations (2.27) and (2.30) are bilinear and it is possible that for some initializations of the binary variables, the MDLP master problem may eliminate feasible regions and therefore not consider favorable options in the superstructure (Kocis, 1988). This can be remedied by reformulating the bilinear equations using the modeling/decomposition strategy with appropriate under-approximators. However these underestimators may not be easy to generate. Also, initialization of the continuous variables plays a significant role because of the extreme nonlinearity of the models. In the examples presented in the next section, a lower bound to the objective was determined by solving a PFR model, the DSR's in the reactor modules were initialized as PFR's and the binary variables associated with them were initialized to one. This initialization procedure was observed to be effective in avoiding these difficulties.

The resulting compact MINLP structure is a constructive technique; alternative reactor paths are considered by the use of reactor modules. The optimal reactor structure is determined at each stage but other paths are not eliminated. For instance, parallel reactor structures or bypass structures up to the i-1* module will be realized while considering the i*h reactor module extension, if they exist at the optimum. The exit streams of the upstream reactor modules in parallel or bypass mix to form the inlet stream for the next reactor module. The advantages of this approach are:

1) The MINLP combines attainable region properties and superstructure techniques
2) The network is sufficiently rich to yield the optimum network
3) The approach overcomes the need for monotonic objective improvement as in the B&B approach.
4) The MINLP realizes parallel structures and bypasses automatically if they exist at the optimum
5) Higher dimensional problems are addressed directly through the MINLP formulation.

In addition, the algorithm allows for complete forward connectivity in the reactor network. Hence, reactor structures which are not considered directly in the algorithm can still be realized. An interesting example is a DSR with a variable composition sidestream feed taken from side exits of a PFR, as shown in Figure 11. Hopley (1995) recently derived such a network with attainable region constructions and in Appendix B, we show that such a structure is also allowed by our MINLP formulation. In the next section we illustrate this MENLP approach on a variety of reactor network synthesis problems.

3. Reactor network examples

In order to demonstrate the performance of the algorithm, five examples from B&B (1992a) were solved using the new technique. The kinetic models and reaction conditions are given in Appendix C. The results of the optimization are:

Example network	**Objective**	**Optimal Value**		**Reactor**
		(Solution time, sec)		(Residence time, sec)
	Max	**B&B**	**MINLP**	
1. **a** Pinene	**XB**	1.480(0.13)	1.480(0.16)	**PFR** (60)
2. Trambouze	**XC / (1 - X A)**	0.500(0.10)	0.500(0.11)	CSTR (7.5)
3. Denbigh I	**XC**	3.540 (0.22)	3.540 (0.60)	PFR (0.766) + CSTR (3505)
4. Denbigh II	XB / **XD**	1.322(0.07)	1.322(0.10)	PFR (0.209)
5. Van do Vusse I	**XB**	0.736 (0.05)	0.736 (0.07)	PFR (0.262)

All the MINLP models were solved using DICOPT++ (Viswanathan and Grossmann, 1990), which is interfaced to the GAMS (Brooke et al, 1988) modeling system, on a HP 9000-720 workstation. The MENLP algorithm yields identical solutions as compared to the earlier algorithm. All of these solutions have been shov\n to be globally optimal (BalakrishnaandBiegler, 1992a, Hildebrandt et al, 1990). The solution times are slightly higher than those observed using the B&B algorithm. However the new algorithm allows the designer to find solutions which involve complex reactor networks and finds the best solution even if the objective improvement is nonmonotonic as seen in the examples which follow.

Example 6 *(Isothermal Reactor Network Synthesis).* The isothermal Van de Vusse reaction involves four species for which the objective is the maximization of the yield of the intermediate species B, starting with a feed of pure A. The reaction kinetics is given by

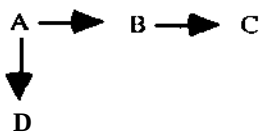

$$R(X) = [\, -X_A - 20\, X_A^2,\ X_A - 2\, X_B,\ 2\, X_B,\ 20\, X_A^2 \,]$$

The B&B algorithm yields a sub-optimal network of a recycle reactor (recycle ratio = 0.772, T = 0.1005 sec) in series with a PFR (x = 0.09 sec) with a yield of 0.069 and a computational time of 0.038 sec on a HP-UX 9000-720 workstation.

The constructive MINLP approach was applied to this 2D problem (X A and XB are the two independent dimensions). Each reactor module consists of a CSTR and a PFR. The optimal network was found to be a CSTR (0.302 sec, X = 0.059) followed by a PFR (0.161 sec, X = 0.0703) with an optimal yield of 0.0703. This solution is confirmed by the geometrical attainable region technique of Hildebrandt and Glasser (1990). The computational time on a HP-UX 9000-720 workstation is 0.041 sec, which is almost the same as that taken by the B&B approach. Attainable region properties 1) and 3) from section 2.1 were used to make the MINLP as compact as possible.

Note that the B&B algorithm could not identify this network solution because the yield obtained from the recycle reactor at the end of the first stage (X=0.063) is higher than that obtained by the CSTR (X=0.059). Hence, the B&B algorithm picked the recycle reactor and considered extensions from it. However, a PFR extension from this CSTR, which is

suboptimal in the first stage, improves the objective more than any extension from the recycle reactor. The constructive MINLP technique achieves the optimum by not eliminating suboptimal solutions until the final stage has been reached. Thus, the problem of nonmonotonic objective improvement is overcome.

Example 7 *(Reactor flowsheet integration).* The reactor network synthesis procedure is coupled with the simultaneous solution strategy for reactor flowsheet integration. The Williams-Otto flowsheet, a typical flowsheet optimization problem (Ray and Szekely, 1973), is considered in this optimization. The schematic diagram of the flowsheet is shown in Figure 7. The raw materials A and B are fed to the reactor, where they react to form an intermediate C, desired product P, byproduct E and waste product G. The rate vector for the components A, B, C, P, E and G respectively is given by

$$R(x) = [\ -k_1 X_A X_B\ ;\ -(k_1 X_A + k_2 X_C) X_B\ ;\ 2 k_1 X_A X_B - 2 k_2 X_B X_C\ ;\ k_3 X_P X_C;\ k_2 X_B X_C - k_3 X_P X_C;\ 2 k_2 X_B X_C;\ 1.5 k_3 X_P X_C\ ]$$

where k_1 = 110.695 wt frac h^{-1}, k_2 = 561.088 wt frac h^{-1}, k_3 = 1248.748 wt frac h^{-1} and the X's denote the weight fractions of the components. The reaction scheme is given by

$$A + B \rightarrow C$$
$$C + B \rightleftharpoons P + E$$
$$P + C \rightarrow G$$

The effluent from the reactor is cooled in a heat exchanger, followed by a decanter where the waste product G is separated from the other components. The waste G is then treated in a waste treatment plant while the remaining components are fed to a distillation column which separates the desired product P. Some of the bottoms product from the distillation column is recycled to the reactor inlet and the rest is used as fuel.

The objective function considered in the optimization is an annualized net profit which includes sales, cost of raw materials, sales and research expenditure, utility cost, depreciation costs and the last term annualizes the capital cost.

$$J = (8400 * (0.3 F_P + 0.0068 F_D - 0.02 F_A - 0.03 F_{fi}) - 0.124 * (8400) * (0.3 F_P + 0.0068 F_D) - 2.22 F_R - 0.1 * (6 F_R * t) - 0.33 * (6 F_R * t)$$

where FA, FB and Fp are the flow rates of A, B and pure P. Fp is fixed at the desired level. FD is the purge flow rate and FR is the total flow of components within the reactor. The variable t denotes the residence time in the complete reactor network. The reactor cost is a function of residence time and is irrespective of the reactor type. This assumption is reasonable since the capital cost of the reactor is usually much smaller than the operating costs.

The reactor in the flowsheet is replaced by a 3D reactor module consisting of a DSR and a CSTR. The constructive MINLP algorithm for optimal reactor synthesis is combined with the constraints imposed by the process flowsheet. The production rate of waste G is assumed to be constrained by an environmental regulation to be a maximum of 11.5 lb/hr. The optimal reactor network was found to be a PFR (DSR without sidestream addition) and the maximum annualized profit was found to be $135.21 * 1000 $/yr for a production rate of 2720 lb/hr of desired product P. The residence time in the PFR was found to be 0.1 hr. If the residence time is restricted to a maximum of 0.02 hr, the profit was found to be $133.21 * 1000 $/yr in a plug flow reactor as in Lakshmanan and Biegler, 1995. Reactor module extensions did not improve the objective. The computational time taken on HP-UX 9000-720 workstation was 2.09 CPU seconds. Note that the space of initial conditions of the streams entering the reactor network is not fixed, but is bounded by flowsheet constraints.

Example 8 *(Nonisothermal Reactor Network Synthesis).* The sulfur dioxide oxidation reaction considered in this example is exothermic and reversible. The reaction follows complex kinetics and it is assumed that the reaction occurs at constant pressure. The extent of reaction, g is defined as the number of moles of sulfur trioxide formed per unit mass of mixture.

$$SO2 + 1/2\ 02 \rightarrow SO3$$

$$R(g,t) = 3.6*10^3[\exp(12.07-50/(l+0.311t))\ ((2.5-g)0-5(3.4_6.0.5g)/(32.01-0.5g)^{1-5}) - \exp(22.75-86.45/(1+0.31\ It))\ g(3.46-0.5g)^{\circ-5}/((32.01-0.5g)(2.5-g)0-^{5})]$$

kg mole SO3/hr/kg catalyst

where $t= (T-T_o)/J$ T is the temperature of the mixture in °C

J is assumed to have an average value of 96.5 K Kg/mol

The specific heat of the mixture is assumed to be constant, so the energy balance is represented by $T-T_o = J(g-go)$ where T_o is the temperature of the mixture at extent g_o. The feed has a composition of 7.8 mol % SO2, 10.8 mol % O2 and 81.4 mol % N2 at a temperature of 37°C, a pressure of 1 atm, and a flowrate of 7731 kg/hr. The feed may be

preheated. The objective is to maximize the extent of the reaction. Two cases are considered, the nonadiabatic and the adiabatic case.

Case a) Nonadiabatic nonisothermal reactor network synthesis

The nonadiabatic case was solved by Balakrishna and Biegler (1992b). They found the optimal reactor network to be a PFR with a falling temperature profile. The maximum extent of reaction was a function of the residence time (x) with g=2.42 at x=0.25 sec, g=2.48 at x=2.5 sec and g reaches 2.5 asymptotically at large residence times. The rate of the reaction is high at high initial temperatures. Hence, an arbitrarily high preheat temperature of 600°C was used.

Case b) Adiabatic nonisothermal reactor network synthesis

Intuitive reasoning suggests that a falling temperature profile would optimize the extent of reaction since the reaction is exothermic. However, adiabatic restrictions make it difficult to maintain a falling temperature profile, unless a cold shot cooling reactor or a DSR with side stream colder than the reactor temperature, were used. Many researchers have worked on this problem, Lee and Aris (1963) suggested a preheater followed by a 3 **stage** cold shot cooling **reactor. Melange and Villermaux (1967),** Helinckx and Van Rompay (1968) and Melange and Vincent (1972) suggested a preheater followed by a cold shot cooling reactor with 3 or more stages. Glasser et al (1992) suggested a serial combination of a preheater followed by a CSTR, PFR, DSR and PFR to be the optimal reactor network for this reaction.

The constructive MINLP approach was applied to this 3D problem (preheating of the feed introduces a third dimension T, in addition to g **and** t). The allowable preheat temperature range was chosen to be 520 °C - 615 °C. Here, the reactor module consists of a CSTR and a DSR. This problem required four stages of the algorithm. The optimal preheat temperature was found to be 538.5 °C with an optimal network of a serial arrangement of a CSTR (X=0.232, T=560.9 °C) followed by a PFR (X=0.283, T=564.3 °C), a DSR (X=2.426, T=398.9 °C) and finally a PFR giving an optimal extent of reaction of g=2.48 with T=403.9°C. The optimal network is shown in Figure 8. The computational time taken on a HP-UX 9000-720 workstation was 3.69 CPU sec. The results of our approach match the results of the graphical technique of Glasser et al (1992).

3. Conclusions

A compact MINLP approach to reactor network synthesis which synergistically combines superstructure and previous targeting techniques has been proposed. This constructive algorithm targets the attainable region by making use of reactor modules. Various attainable region and superstructure properties derived from geometric targeting techniques were used to simplify the reactor module and to ensure that the superstructure is sufficiently rich to yield optimal reactor networks. Some other features of the algorithm are that parallel reactor structures and bypasses are identified automatically, if they exist for the optimal network, and the new algorithm overcomes the need for monotonic improvement of the objective at each iteration. The constructive MINLP algorithm attempts to find the best solution with available optimization techniques. It first specifies a lower bound on the objective by optimizing a segregated flow target from the feed and then uses this solution to initialize the next module. This procedure ensures that the stagewise solutions steadily improve without discarding inactive parts of the candidate network. Also, higher dimensional problems may be solved by using this algorithm. For this purpose complex reactor structures which appear in higher dimensional problems have been incorporated in the reactor module.

The nonconvexity of the reactor models and the rate equations require that the algorithm be made as simple as possible. The constructive nature of the algorithm ensures that only the simplest model which needs to be considered at each stage is solved. Also, the absence of recycles reduces the nonlinearity of the model. However, the resulting approach is an MINLP technique and may be computationally expensive. The feasibility and versatility of this algorithm is demonstrated by solving a set of examples with varying complexity. Five small examples were solved initially in order to show the feasibility and dependability of the algorithm. In addition, Example 6 demonstrates how the algorithm overcomes the need for monotonic improvement in the objective, Example 7 integrates the synthesis of the reactor network with the process flowsheet, which could be difficult and tedious using geometric techniques, and the eighth example demonstrates how complex reactor networks may be realized by using this constructive technique.

Hence, the MINLP algorithm is quite comprehensive. It is a versatile algorithm which allows the designer to incorporate additional attainable region properties when necessary. In addition, reactor structures which are more complex than those considered in the modules may be realized as shown in Appendix B.

Acknowledgment

This research was partially supported by the Engineering Design Research Center, an NSF sponsored engineering center at CMU, and the Department of Energy.

Nomenclature

f(oc) = residence time distribution in the PFR or DSR

f(<X(i)) = f(ot) in module i

fij = residence time distribution at reacting element i, collocation point j

Fjf = inlet flowrate to the ith reactor module

Fic> Fid = flowrate through the CSTR and DSR in the ith reactor module

Fki-1 = exit flowrate from module k which is an inlet to module i-1, k=0, i-1

g = extent of the reaction

q(ot) = fraction of Qside entering the DSR at a

q(oc(j)) = q(a) in module i

qij = fraction of Qside entering the DSR at reacting element i, collocation point j

Q(a) = Volumetric flowrate through the PFR or DSR at a

Q(tt(i)) = Q(oO in reactor module i

Qexit = exit flowrate from the DSR (Qi_n + Qside)

Qin = inlet flowrate to the DSR

Qij = Volumetric flowrate through the reactor at element i, collocation point j

Qside = side stream flowrate to the DSR

R(X(cc), T(oc)) = rate vector at a

R(Xij. Tij) = rate vector at element i, collocation point j

t = residence time

T(oc) = temperature inside the reactor at a

T CSTR (i) = temperature inside the CSTR in module i

T DSR exit (i) = temperature at exit of the DSR in module I

Tij = temperature inside the reactor at element i collocation point j

U = the upper bound on the variable

X((X(i)) = concentration vector at point a inside the DSR in module i

XA,XB,XC,XP = dimensionless concentration of components A, B, C, P

XCSTR (i) = concentration vector inside the CSTR in module i

XDSR (i) = concentration vector inside the DSR in module i

Xj end = concentration vector at the end of reacting element i

Xj **o** = concentration vector at the beginning of reacting element i

Xic in = concentration vector at the inlet to the CSTR in module i

Xid in = concentration vector at the inlet to the DSR in module i

Xjf = concentration vector at the feed to module i

X()(i) = concentration vector at the reactor iniet in module i

$X_S$eg = concentration vector inside the segregated flow reactor

Xside = concentration vector in the DSR sidestream

Yjc = Binary variable denoting the existence / nonexistence of the CSTR in module i

Yj_c = Binary variable denoting the existence / nonexistence of the DSR in module i

GreekLetters

a = time along the length of the reactor

x = mean residence time

<ϕi = fraction of the inlet flow to the ith reacting element which was added by the sidestream

Appendix A: Individual recycle reactors and global recycles are not part of the attainable region

Through a geometric argument, Hildebrandt (1990) showed that individual recycle reactors are not part of the attainable region (AR) boundary. In this section we show that a global recycle does not form a part of the AR boundary. As an illustration, consider the candidate AR shown in Figure 9. Assume that this candidate region may be extended by a global recycle around a network of reactors represented by reactor trajectories R1, R2, etc. and we assume that a global recycle is actually part of the AR boundary. Point A is the initial feed point, point B the point achieved after mixing the global recycle stream with the feed point, point C the maximum concentration achieved by the reactor network and point D the exit point of the global recycle. The new AR is completed by a mixing line between D and point E a point on the initial AR candidate. However, as shown in Figure 9 a mixing line between C and A or a CSTR operating at point C followed by the reactor trajectory R2 to point D and the mixing line to E extends the new AR even further. In effect the *convex hull* of the global recycle is developed and a recycle reactor or a recycle over a reactor network lies strictly interior to this convex hull. Hence, any point on the boundary of the AR is achieved without recycle reactors or global recycles.

Any point on the boundary of an N dimensional attainable region may be achieved by N parallel structures: This property was shown by Feinberg and Hildebrandt (1992) and is illustrated for the two dimensional attainable region formed by a PFR trajectory with the concavity in the trajectory filled by a mixing line. From Figure 10 we see that any point on the boundary of the attainable region may be achieved by 2 parallel reactor structures and any point on the interior may be represented by 3 parallel structures.

Appendix B: DSR with the sidestream composition varying along the length of the reactor.

Hopley (1995) suggested that in complicated adiabatic exothermic reversible reactions, a DSR with the sidestream originating from a PFR may exist (Figure 11). Although such a DSR is not considered in the reactor module, the fact that the algorithm allows for complete forward connectivity enables us to approach such a reactor structure in the limit, as shown in Figure 12a and 12b. Figure 12a shows the structure of the reactor modules which will be chosen at the optimum, if a DSR like that shown in Figure 11 exists at the optimum. The PFR (DSR without the sidestream) may be picked in each of the modules resulting in the structure shown in Figure 12b. This structure is an approximation to the DSR in Figure 11.

Appendix C: Kinetics and reaction conditions for the examples considered

a Pinene: The reaction involves five species A, B, C, D and E. The objective is to maximize the selectivity of C over D with a feed of pure A. The reaction kinetics and rate vector are

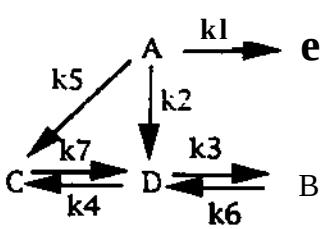

$R(X) = [\ -(k1 + k2)X_a - 2k5X_a^2,\ -k6Xb + k3Xd,\ k5X_a^2 + k4Xd^2 - k7X_c,\ k2X_a + k_6X_b - k3Xd - 2k4Xd^2 + 2k7X_c,\ kjX_a\ ]$

where, Xj = Q/CAO and CAO = ' mo l/l

ki = 0.33384 s^{-1}, k2 = 0.26687 s^{-1}, k3 = 0.14940 s^{-1}, L* = 0.18957 lit moH s^{-1}

k5 = 0.009598 lit moH s^{-1}, k6 = 0.29425 s^{-1}, k7 = 0.011932 s^{-1}

The residence time was restricted to a maximum of 60 seconds.

Trambouze: The Trambouze reaction involves four components and has the following reaction scheme

$$A \xrightarrow{kl} B \qquad A \xrightarrow{k2} C \qquad A \xrightarrow{k3} D$$

where, kl = 0.025 lit mol"^{1} min"^{1}, k2 = 0.2 min"^{1} and k3 = 0.4 lit mol"^{1} min"^{1}

Denbigh I: The isothermal Denbigh involves five species. The objective is to maximize the production of C subject to 95% conversion of A. The reaction scheme and rate vector are

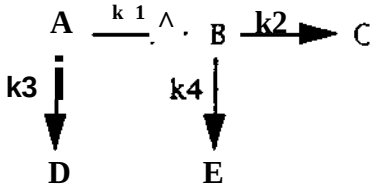

R(X) = [$-X_a(k_3 + kiX_a)$, k]X_a^2 - $X_b(k_4X_b + k_2)$, k_2X_b, k_3X_a, $k_4X_b^2$]
where ki = 6 lit mol'^{1} s"^{1}, k2 = k3 = 0.6 s"^{1}, k4 = 0.6 lit mol'^{1} s"^{1}, CAO = 6 mol/1

Denbigh II: The objective function considered is maximize Xb/Xd and the rate vector is

R(X) = [$-X_a(k3 + kiX_a)$, $0.5kiX_a2$ - $X_b(k4X_b + k_2)$, k_2X_b, k_3X_a, $k_4X_b^2$]
where k] = 6 lit mol"^{1} s"^{1}, k_2 = k3 = 0.6 s"^{1}, k4 = 0.6 lit mol"^{1} s"^{1}, C_ao = 6 mol/1
and CdO = 0.6 mol/1

Van de Vusse I: The objective is the maximization of the yield of intermediate species B, given a feed of pure A. The reaction scheme is shown in Example 6) and the rate vector considered here is
R(X) = [$-10\ X_A - 0.29\ X_A^2$, $10\ X_A - X_B$, X_B, $0.29X_A^2$]

References

Achenie, L.E.K.; Biegler, L.T. Algorithmic Synthesis of Chemical Reactor Networks using Mathematical Programming. *I&EC Fund.* 1986, 25, 621.

Achenie, L.E.K.; Biegler, L.T. Developing Targets for the Performance Index of a Chemical Reactor Network. *I&EC Research.* 1988, 27, 1811.

Balakrishna., S.; Biegler, L.T. A Constructive Targeting Approach for the Synthesis of Isothermal Reactor Networks. / & *EC Research.* 1992a, 31(9), 300.

Balakrishna., S.; Biegler, L.T. Targeting Strategies for Synthesis and Energy Integration of Nonisothermal Reactor Networks. / & *EC Research.* 1992b,31(9), 2152.

Balakrishna., S.; Biegler, L.T. A Unified Approach for the Simultaneous Synthesis of Reaction, Energy, and Separation Systems. / & *EC Research.* 1993,32(7), 1372.

Brooke, A.; Kendrick, D.; Meeraus, A. GAMS: A User's Guide; Scientific Press; Redwood City, CA, 1988.

Chitra, S.P.; Govind, R. Yield Optimization for Complex Reactor Systems. *Chem. Eng. Sci.* 1981,36, 1219.

Chitra, S.P.; Govind, R. Synthesis of Optimal Reactor Structures for Homogenous Reactions. *AIChE J.* 1985,31(2), 177..

Duran, M.A.; Grossmann, I.E. Simultaneous Optimization and Heat Integration of Chemical Processes. *AIChE J.*, 1986, 32,123.

Feinberg, M. and D. Hildebrandt, Optimal Reactor Design from a Geometric Viewpoint. Paper 142c, *AIChE Annual Meeting,* Miami Beach, FL, 1992.

Floudas, C. and I. E. Grossmann, "Algorithmic Approaches to Process Synthesis: Logic and Global Optimization," *Foundations of Computer Aided Process Design '94,* ATChE Symposium Series, 91, L. T. Biegler and M. F. Doherty (eds.), p. 198 (1995)

Glasser, B.; Hildebrandt,D.; and Glasser,D. Optimal Mixing for Exothermic Reversible Reactions. *Ind. Eng. Chem. Res.*, 1992, 31(6), 1540.

Glasser, D.;. Crowe, C; Hildebrandt, D. A Geometric Approach to Steady Flow Reactors: The Attainable Region and Optimization in Concentration Space. / & *EC Research.* 1987, 26(9), 1803.

Helinckx, L.G.; Van Rompay, P.V. Paper presented at the 97th event of the European Federation of Chemical Eng., Florence, Italy; April 27-30, 1970.

Hildebrandt, D.; Glasser, D.: Crowe, C. The Geometry of the Attainable Region Generated by Reaction and Mixing with and without Constraints. / & *EC Research.* 1990, 29(1), 49.

Hildebrandt, D. and L. T. Biegler, "Synthesis of Reactor Networks," *Foundations of Computer Aided Process Design '94,* AIChE Symposium Series, 91, L. T. Biegler and M. F. Doherty (eds.), p. 52 (1995)

Hopley, F.R. Optimal Reactor Structures: On Teaching and a Novel Optimal Substructure. M.S. Thesis, University of Witwatersrand, Johannesburg, South Africa, 1995.

Horn, F. Attainable Regions in Chemical Reaction Technique. Presented at the Third European Symposium on Chemical Reaction Eng., Pergamon, London, 1964.

Jackson, R. Optimization of Chemical Reactors with respect to Flow Configuration. *J. opt. Theory and applns.* 1968, 2(4), 240.

Kocis, G. R. A Mixed-Integer Nonlinear Programming Approach to Structural Flowsheet Optimization. Ph. D. thesis, Carnegie Mellon University, Pgh, PA, 1988.

Kokossis, A.C;. Floudas, C.A. Synthesis of Isothermal Reactor-Separator-Recycle Systems. Presented at the *Annual AIChE meeting,* San Francisco, CA, 1989.

Kokossis, A.C; Floudas, C.A. Optimization of Complex Reactor Networks — I. Isothermal Operation. *Chem. Eng. ScL* 1990, 45 (3), 595.

Kokossis, A.C, Floudas, C.A. Synthesis of Non-isothermal Reactor Networks. Presented at the *Annual AIChE meeting,* San Francisco, CA, 1991

Lakshmanan, A. and L.T. Biegler, "Reactor Network Targeting for Waste Minimization," in *Pollution Prevention via Process and Product Modifications,* AIChE Symposium Series, 90, M. El-Halwagi and D. Petrides (eds.), p. 128 (1994)

Lee, K. Y.; Aris,R. Optimal Adiabatic Bed Reactors for Sulfur Dioxide with Cold Shot Cooling. / *& EC Proc. Des. & Dev.,* 1963, 2(4), 301.

Malenge, J.P.; Villermaux, J. Optimal Design of a Sequence of Adiabatic Reactors with Cold Shot Cooling. *I & EC Chem. Proc. Des. & Dev.* 1967, 6, 535.

Malenge, J.P.; Vincent, L.M. Optimal Design of a Sequence of Adiabatic Reactors with Cold Shot Cooling. *I & EC Chem. Proc. Des. & Dev.* 1967, 11(4),465.

Pantelides, C. and E. Smith, "A Software Tool for Structural and Parametric Design of Continuous Processes," presented at Annual AIChE Meeting, Miami Beach (1995)

Viswanathan, J. V.; Grossmann, I.E. A combined penalty function and outer approximation method for MINLP optimization. *Comput. and Chem. Engg.* 1990, 14, 769.

Table 1: Segregated flow reactor and continuous stirred tank reactor targeting formulations for isothermal reactor network synthesis

PFR target	CSTR target
Max J(Xexit)	Max J(Xexit)
Xexit = $\int_0^{t_{max}} f(t)\, X_{seg}(t)\, dt$	Xexit= Xo + R(X) x
$T = \int_0^{t_{max}} f(t)\, dt$	
$dX_{seg}/dt = R(X_{seg})$	

Figurel. An example of candidate attainable regions with nonmonotonic increase in the objective.

Figure 2. Schematic of a Differential Sidestream Reactor.

Figure 3. Discretized element of a DSR for NLP formulation.

Figure 4. Reactor module for two and three dimensional problems.

Figure 5. Individual reactor module as a building block for the MINLP formulation.

Figure 6. An example of parallel structures from the MINLP formulation.

Figure 7. Williams Otto process flowsheet.

Figure 8. Optimal reactor network for the SO2 oxidation problem.

Figure 9. Illustration that global recycles are not part of the AR boundary.

Figure 10. Two dimension illustration of 2 reactors on the AR boundary and three within the interior.

Figure 11. A DSR with the sidestream originating from a **PFR.**

Figure 12a. MINLP structure of the reactor modules at the approximate solution for Figure 11.

Figure 12b. An approximation to the DSR in Figure 11.

FIGURE 1

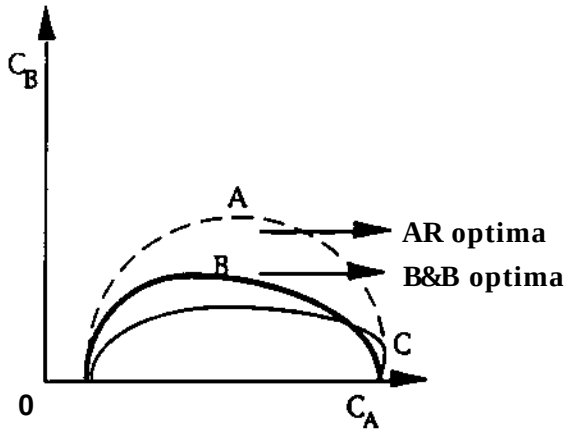

FIGURE 2

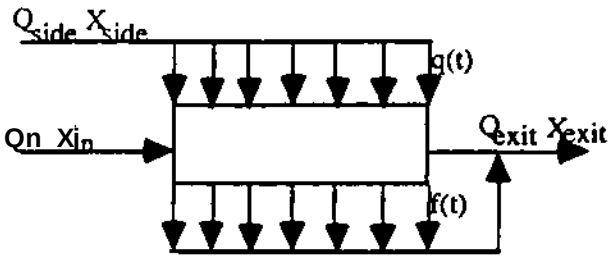

FIGURE 3

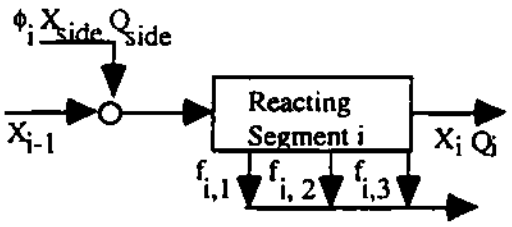

FIGURE 4

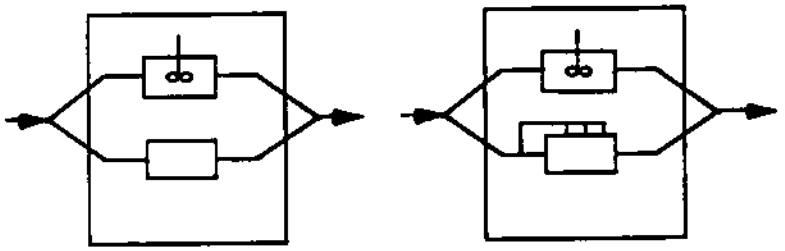

2D Module

3D Module

FIGURE 5

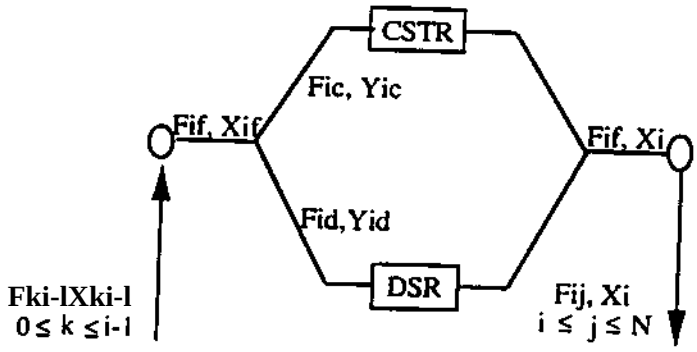
CSTR
Fic, Yic
Fif, Xif
Fif, Xi
Fid,Yid
DSR
Fki-lXki-l
0 ≤ k ≤ i-l
Fij, Xi
i ≤ j ≤ N

FIGURE 6

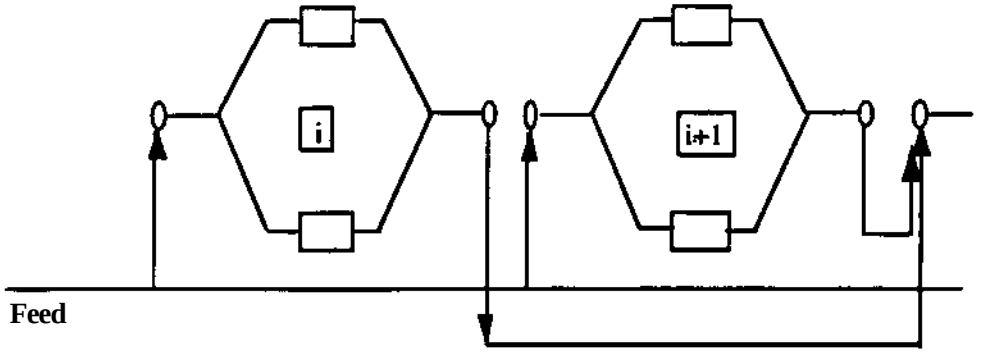

FIGURE 7

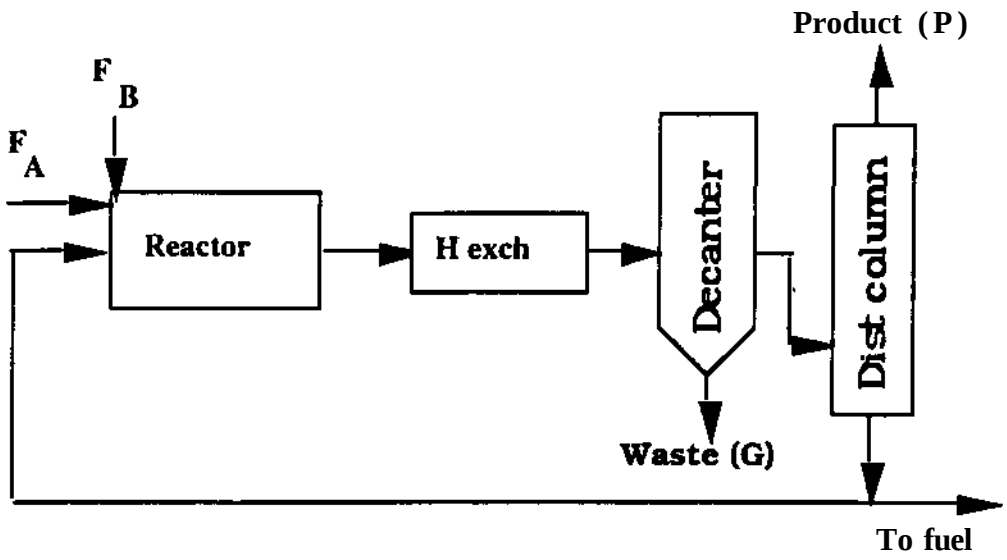
Product (P)
F B
F A
Reactor
H exch
Decanter
Dist column
Waste (G)
To fuel

FIGURE 8

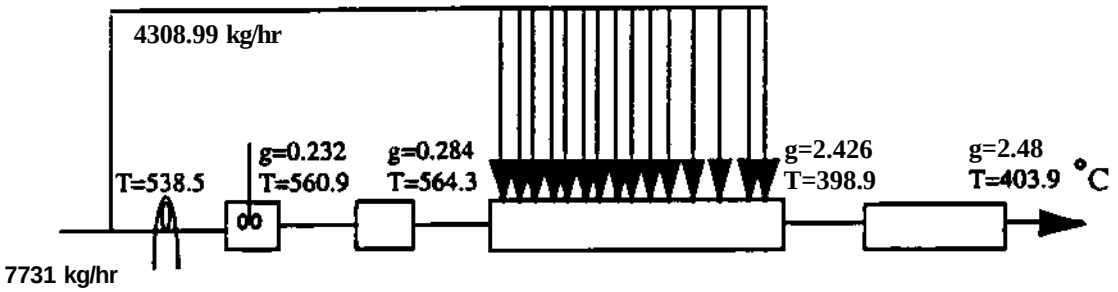
4308.99 kg/hr
T=538.5
g=0.232
T=560.9
g=0.284
T=564.3
g=2.426
T=398.9
g=2.48
T=403.9 °C
7731 kg/hr

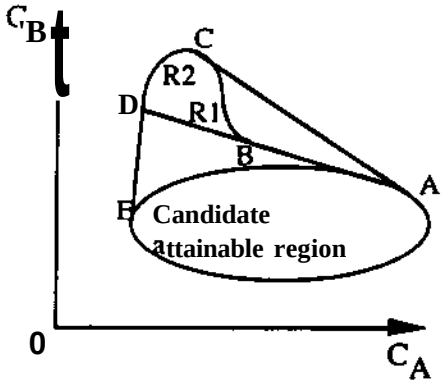
C_B
C
R2
D
R1
B
A
E
Candidate
attainable region
0
C_A

FIGURE 10

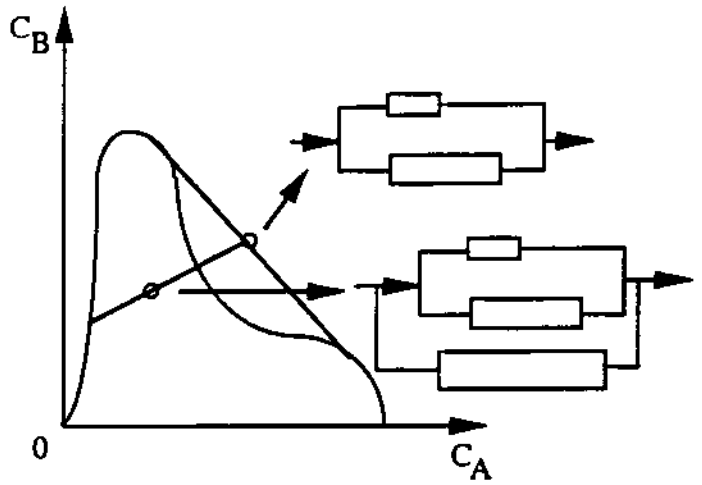

FIGURE 11

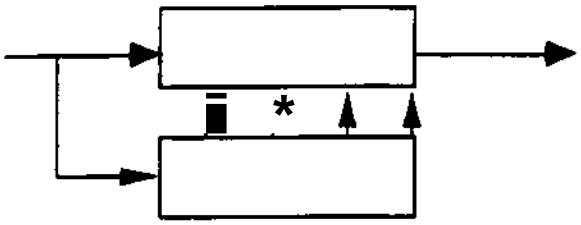
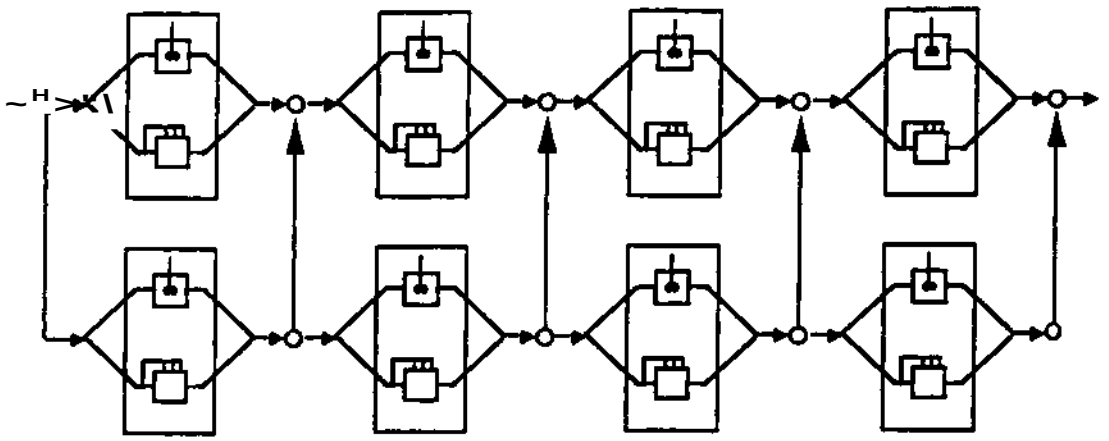
FIGURE 12a