Carnegie Mellon University
Research Showcase @ CMU

Department of Chemical Engineering | Carnegie Institute of Technology

1992

An overview of process integration methodologies

Arthur W. Westerberg
Carnegie Mellon University

Carnegie Mellon University.Engineering Design Research Center.

Follow this and additional works at: http://repository.cmu.edu/cheme

Recommended Citation
.

This Technical Report is brought to you for free and open access by the Carnegie Institute of Technology at Research Showcase @ CMU. It has been accepted for inclusion in Department of Chemical Engineering by an authorized administrator of Research Showcase @ CMU. For more information, please contact research-showcase@andrew.cmu.edu.

NOTICE WARNING CONCERNING COPYRIGHT RESTRICTIONS:
The copyright law of the United States (title 17, U.S. Code) governs the making of photocopies or other reproductions of copyrighted material. Any copying of this document without permission of its author may be prohibited by law.

An Overview of Process Integration Methodologies

Arthur W. Westerberg

06-120-92

An Overview of Process Integration Methodologies

Arthur W. Wcstcrberg

Department of Chemical Engineering
and the Engineering Design Research Center
Carnegie Mellon University
Pittsburgh, PA 15213

Abstract

A general synthesis problem may be one where generation of an alternative solution is easy. At the other extreme, it may be one where finding even one solution is a very difficult problem. We discusses many different approaches by which synthesis problems have been solved

Different decomposition schemes exist for synthesizing total processes. We discuss three which have energy integration as the final step, usually where stream flows and temperatures are fixed. As the insights that result from this "classic" problem are extremely important, we provide a unified presentation of several key results for this problem.

Energy integration affects earlier design decisions. It cannot be placed last. We show how the heat cascade representation aids in establishing"correct" equipment placement to aid in designing processes that better heat integrate. Integration reduces the apparent cost of energy and leads to designs that consume more energy to improve the utilization of raw materials. We show with a last example that consideration of energy integration issues can in fact aid in discovering the concepts on which to base a design.

Introduction

Process integration problems are a part of the problems that arise in the design of chemical processes. In this paper we interpret integration to be the inclusion within the design of equipment to reduce the energy consumption of the process, equipment which typically includes heat exchangers, furnaces, valves, pumps and compressors. These latter items allow us to construct heat pumps and heat engines.

It is well recognized that this problem cannot be isolated from the total design process. Energy integration reduces the apparent cost of energy for a process. With less expensive energy, more will be used to improve, for example, the conversion of raw materials to products. In spite of this recognition, the overall process design problem is sufficiently complex that many methods are proposed to decompose it into a sequence of design problems, with energy integration typically being the last. In these decompositions the energy integration problem becomes one with fixed flows and temperatures, the form in which it has been studied the most

We start this paper by discussing synthesis in general. Many of the results in synthesis in chemical engineering are driven by energy integration. However, there are also many synthesis problems where the methodology cannot be based on the heat flows through the system. An example in chemical engineering is the design of pressure swing adsorption systems. It is even more true in other disciplines such as the design of very large scale integrated (VLSI) circuits, of a bridge or of a new car [Westerberg, 1989].

We then concern ourselves with the synthesis of chemical processes, looking first at the decompositions alluded to above. These permit us to consider integration last for a process being designed and, therefore, to consider it for fixed temperatures and flowrates. We shall discuss the design methodologies that have evolved and the concepts on which they are based.

Finally the paper will challenge these decompositions. We shall look at examples where heat integration is considered early in the design. It will drive other design decisions and lead to processes that can be better heat integrated.

The Overall Design Problem

We can break the steps involved in creating a design into the following

Conceptual design
- Perceived customer need
- ***Conceptual product design***
- Customer feedback

Project organization
- ***Design of the design process***
- Organization and assembly (staff and tools)

Product
- ***Configurational design of product or process***
- ***Detailed design,* simulation**

Manufacturing process
- ***Detailed design of manufacturing process***
- Creation of manufacturing facilities

Production
- Manufacture of small lots
- Mass production

Sales, maintenance, ... disposal

Several of these steps involve the design of a physical artifact (indicated by italics above), from conceptual design of the product to design of the maintenance organization. We can identify the steps involved in each of these designs. One starts each with an abstract view of the artifact to be designed and ends with a more detailed (refined) view of it. Fig. 1 illustrates the steps.

The first step is *concept generation.* Closely allied with concept generation is a synthesis activity. Often, these two steps are not distinguished; however, we shall make the following distinction between them. In concept generation we determine the allowable technologies within which we are willing to look for a solution. Within these technologies are almost always numerous possible alternative configurations for the product or process. We shall label the generation of these alternatives *synthesis.* Frequently designers do not carry out this synthesis step except to discover the one or two possible designs which they had in mind when they originally selected the concept

An *analysis* step permits us to determine the performance of our. artifact. The analysis tells us the performance on which we then have imposed a metric *evaluating* how much we like this performance. With one - or, more typically, with many metrics evaluated for our design, we can then improve our design by repeating one or more of the earlier steps, i.e., by carrying out an *optimization.*

University Libraries
Carnegie. Mellon University
Pittsburgh PA 15SI3-3890

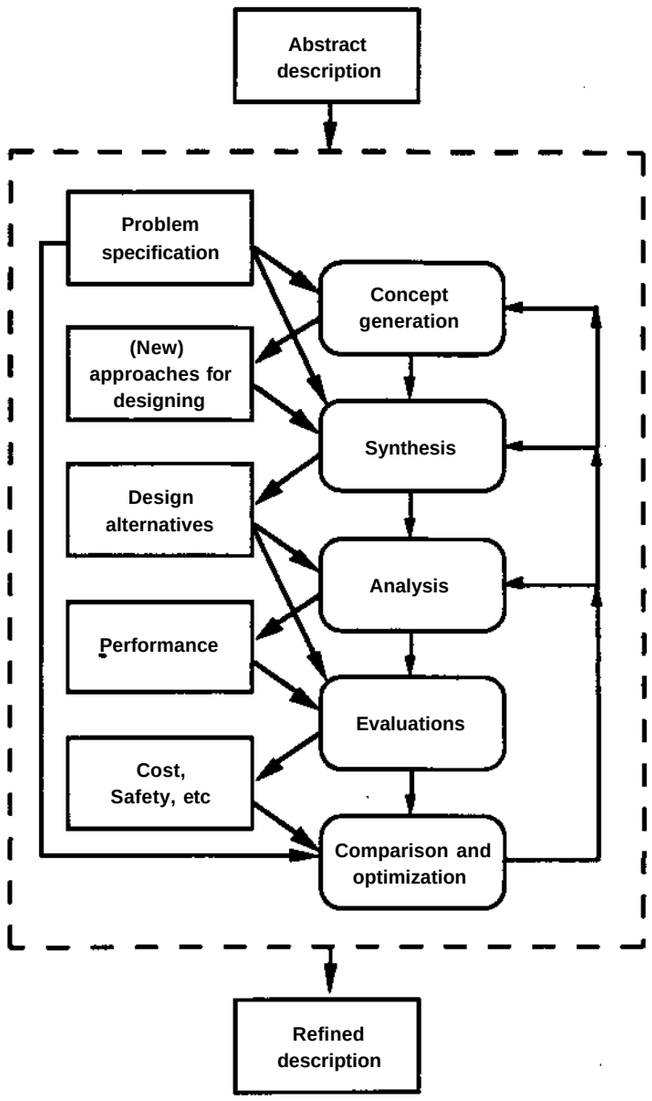

Fig. 1. Steps in refining a design - **the** synthesis step

The Synthesis Step

We assume that the concept - and thus the technologies - allowed for solving the problem are already picked. We may or may not know **how** to design within a given set of technologies; if we do, the design may be fairly routine. If we do not, we will have to learn how as a part of the synthesis activity.

Example

Consider that we are designing a chemical process. We have sketched out the general structure for the process and know that it will contain a reactor running at high temperature. The two feeds to the reactor are available at 100 °F and must be preheated to 580 °F, while its single product must be cooled to 200 °F before storing it Fig. 2 illustrates the problem.

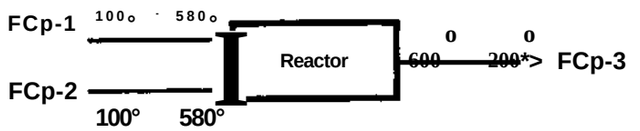

Fig. 2. Heat Exchanger Network Synthesis (HENS) Example

We decide to make our process energy efficient. There is obvious potential to use the product stream leaving the reactor to preheat the two reactant streams entering the reactor using conventional heat exchange equipment. This decision establishes a concept on which we intend to base our design. We must now generate and examine the alternative ways we can design such a heat exchange system. We would like to discover the benefits for such a design. The economic benefits are savings in the use of utilities to carry out the needed heating and cooling; the economic costs are the investments needed for the added heat exchanger equipment required. There may also be operational costs, as an integrated process could be more difficult to control.

We might quickly sketch the two designs shown in Fig. 3, but how many alternatives might there be?

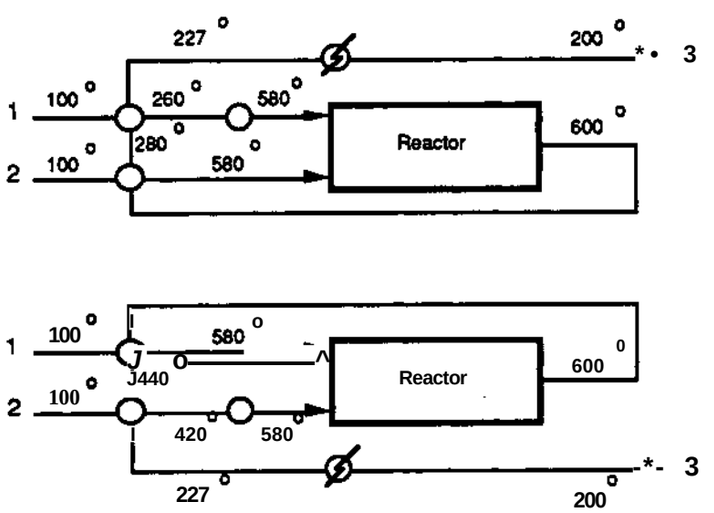

Fig. 3. Two Alternative Designs for Simple Synthesis Problem

We can address this problem by developing a scheme to enumerate the alternatives possible.

Anenumerationscheme

The streams involved are three cold streams (Cl, C2 and cooling water) and three hot streams **(hot water, HI,** and steam). The allowable matches between these streams are as follows.

	hot water	HI	steam
Cl	•	•	•
C2	•	•	•
cooling water		•	

Thus there are three kinds of streams: (1) Cl, C2 and HI which meet up to three other streams; (2) hot water and steam which meet up to two other streams and (3) cooling water which meets with up to one other stream.

Fig. 4 is a sketch of all the ways that one stream could meet with three other streams exactly one time.

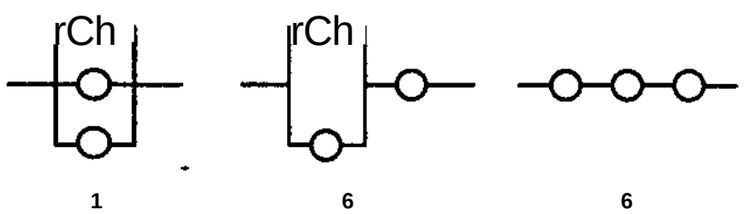

Fig. 4. All Alternative Ways for One Stream to Meet Three Others Once Each

The stream could split into three parts and meet the other three in parallel. There is only one configuration for this option.

It could split into two parts for meeting two of the streams. The third would be met without splitting and could be either the first or last stream to exchange with our stream. Therefore, any one of the three streams could be the one met without splitting (3 alternatives) and the splitting could come first or last (2 alternatives) giving 2 x 3 = 6 possible configurations, as indicated in the middle option above.

Finally our stream could meet the other three streams in series, but there are 3! = 6 possible orderings for it to meet the other streams: 123,132,213,231,312 or 321.

We therefore find that, if it meets all three of the other streams, there are 13 alternatives patterns possible.

Similarly for a stream which can exchange with two other streams, there are 3 alternative configurations, one where they meet in parallel and two where they meet in series.

With just these possibilities, we discover we can already enumerate $13^3 \times 3^2$ = **19773** alternatives. There are many, many more than these possible if we allow any two streams to exchange heat more than one time or not al all. Of course almost all of these alternatives would not make sense for any number of reasons. The above enumeration has examined only the structural possibilities.

We can see that even when the technology is apparent - i.e., we shall use simple heat exchangers - the synthesis problem can be formidable. A designer cannot look only at one or two alternatives as she or he will almost certainly miss the better solutions.

Really hard synthesis problems

For many types of design problems, it is relatively easy to generate alternatives. For the heat exchanger network synthesis problem described above, the real problem is to guarantee that no alternative is overlooked. For distillation-based separation problems where the species are relatively well behaved, one can also quickly develop alternatives. For example, to separate a mixture four components, ABCD, into four relatively pure single component products, one alternative is to split A from BCD, then split BC from D and finally split B from C. Four other simple schemes exist, along with an abundance of many others if parallel and/or multieffect columns are permitted. It is interesting to note that these two problems are the ones most often considered in the process synthesis literature.

There are problems where generation of even a single feasible alternative, much less all possible alternatives, is extremely difficult, given today's understanding of the problem. One such problem is the synthesis of a separation scheme for liquid mixtures where the species display complex homogeneous and heterogeneous azeotropic behavior. A very complex problem in this class is to separate a mixture of water, methanol, acetone and n-pentane, a problem which wje offered as a challenge problem to a recent conference on separation - no one solved it during the time available. Five of the six binary pairs in this mixture display azeotropic behavior, the exception being the methanol/water pair. If one proposes to distill this mixture, then what are the possible products that can be produced? Of these products, which are actually interesting in that they have a high probability of appearing in a final design alternative? Distilling an azeotropic mixture leads to products which are only partially separated. It will always be necessary to recycle partially separated mixtures produced later in a flowsheet back to an earlier separator. Using a problem decomposition that develops a tree of only a few quite distinct alternatives, Wahnschafft et al [1991] propose a methodology that requires a combination of both qualitative reasoning (to keep the search space small enough) and quantitative reasoning (many column simulations are needed to discover product distributions).

Two other problems we might currently classify as extremely hard are the synthesis of reactor networks and separation systems using reactive distillation.

General Approaches to Synthesis

We can look at the general approaches possible to carry out the synthesis task. In several of these cases, we shall also give an example which illustrates the approach.

Total enumeration - generate and test

Enumerate all possible structures. Then among these structures rule out those which fail feasibility checks or which are poor at meeting one of the evaluation criteria such as being too expensive to purchase or operate, unsafe, expensive to manufacture or too inflexible. This approach is usually not possible as the number of alternatives is too large.

One has to take care that all alternatives are discovered, often a formidable task. Also the generation algorithm may develop the same solution many, many times, which can waste considerable time on what is already a very large problem.

Evolutionary search - test and generate

Generate a good first solution (use heuristics), then make small changes until no improvement is possible. This approach is frequently used by designers, but it should be evident that the method will stop at "local" optima, what are called a "topology traps" in the heat exchanger network synthesis literature. It will stop when no adjacent new solution is an improvement over the last. There could be a good solution two or three steps away, but it will not be found.

There are two alternative approaches to the making of small changes. A first approach is to have a list of possible changes and make them one at a time, testing each to see if it leads to an improvement. An alternate approach is to examine the solution and from it decide where the next changes ought to be made. For example, there could be a part of the design that is rather expensive, unsafe and/or difficult to manufacture. Changes in this part of the design would be the first to be proposed. The latter is a variant of the former where one is able to rank order the changes by some heuristic criteria.

Means/ends

Mean/ends is an approach which can be used to add structure to a partially completed design. For this approach one has to define a *state* vector of attributes for the design. These states are initialized to reflect the start of the design. The designer must also identify the final goal state at the start. A *difference metric* measures how far the current state is from the final goal state. The design system must have *operators* which can reduce the observed differences. Observing a difference in the current state and the goal state, the system picks among the operators to change the current state to a new state which is closer - it is hoped - to the goal state. This approach is basically useful to find a feasible solution, but it offers little to one in finding the better solutions unless it is combined with other ideas.

Example

In a heat exchanger problem, start with all the process streams at their input temperatures. These temperatures will be the *current state* of the design. The *goal state* is the set of target output temperatures for all the process streams. The *difference metric* will be the difference in the current and goal temperatures for each of the streams. Propose a heat exchanger *{operator* to remove the differences between the current state and the goal state) be placed between a hot stream which is to be cooled and one of the cold streams which is still colder than it and is not at its target either. Exchange all the heat which can be before (1) one of the streams reaches its target temperature or (2) the stream temperatures approach each other and preclude further exchange. This approach formed the basis of an early heat exchanger network synthesis algorithm by Ponton and Donaldson [1973].

Embedded optimization

Set up a superstructure in which all alternatives of interest are embedded and use optimization to find the best substructure. This approach was proposed very early in the synthesis literature [Ichikawa et al, 1969]. In the earliest of these approaches, every unit in a superstructure received input from the output of every other unit. Split factors, a_{ij}, were

used to determine what fraction of output from unit i would be directed to the input of unit j; these split factors are continuous variables. The problem with this formulation is that a solution tends to have a little bit of every unit in it as there was no way to add a cost for the existence of a unit. More recent approaches, especially the work by Grossmann and his students and coworkers, add binary variables to the formulation which have the value *one* if a unit is present and *zero* otherwise. A cost related to the existence of a unit, no matter how large it is, can then be added to the objective function. The solution will usually have many fewer units in it as a result Also one can write constraints which will exclude certain combinations of units; for example, if unit A is present, then unit B cannot be.

Example

Part $^{f}a^{f}$ in Fig. 5 represents a superstructure for one stream meeting three other streams to exchange heat. Part *V* shows a substructure in which it meets streams 1 and 2 in parallel and then meets stream 3. $^{f}c^{*}$ shows the substructure in which it exchanges in series with streams 2, 1 and 3.

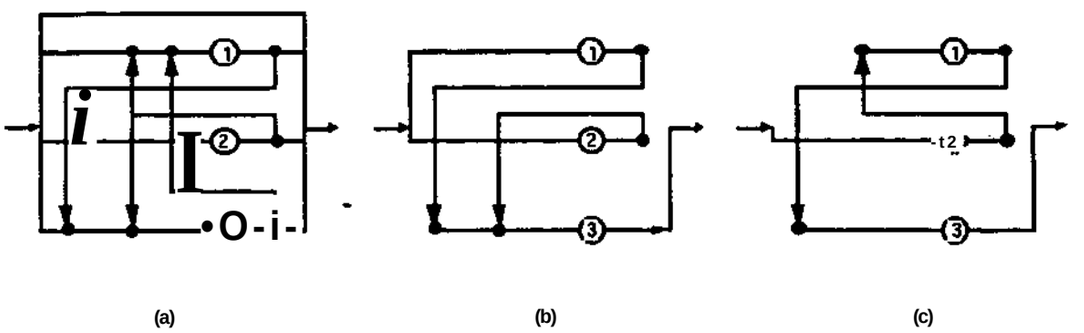

Fig. 5. A Superstructure Representation for Heat Exchanger Networks

Branch and bound searching

Some problems can be "constructed" and evaluated one part at a time. At each step there will be many next parts to add. The next more complete partial solutions each *branch* from the current partial solution. These partial evaluations may offer a lower *bound* on the cost involved for including them within the solution. One can then select the branch with the lowest partial cost and add another part to that solution. If one can get a complete solution with a cost below that of the lower bounds for all the other branches in the search space, then it is guaranteed to be the best solution.

Constraint directed search

Many of the searches described already or following typically involve a form of constraint directed search. They create part of the solution and for it establish a number of constraints on the rest of the design. The generation algorithm is designed to avoid the generation of designs which will violate these constraints.

Example

In the synthesis of heat exchanger networks, one might wish to generate solutions in an evolutionary fashion, adding one exchanger at a time. There could be a constraint that two

streams can meet at most two times in a solution. Once a solution contains two matches between a pair of streams, the system will not generate any further solutions with those two streams matching yet one more time.

Heuristic searching

Rather than developing a rigorous cost function, one might simply use *rules* of thumb based on experience or intuition to decide which part to add next. This approach is rapid but of course has no guarantee of picking the best solution.

Heuristic pruning

A branch and bound type of search can also be pruned using heuristics. Some branches are eliminated by using heuristics which suggest they cannot lead to a good solution. The size of the search space can be dramatically reduced with such an approach.

Hierarchical decompositions/abstraction

In some problems - indeed, in most - one might use a more abstract form for the problem and make decisions using that less detailed view. Decisions made will greatly reduce number of decisions to be made in a more detailed form for problem. When one first sets targets which become constraints for the design for heat exchanger networks, one is using this type of approach.

Decompositions for Complete Process Design

There are several decompositions proposed in the literature for approaching the design of complete chemical processes. The first was proposed by Siirola et al [1971] in their construction of the system called AIDES (Adaptive Initial Design Synthesizer). A very similar decomposition scheme has been proposed by Linnhoff [1983] and is called the onion diagram. Fig. 6 illustrates both these decompositions.

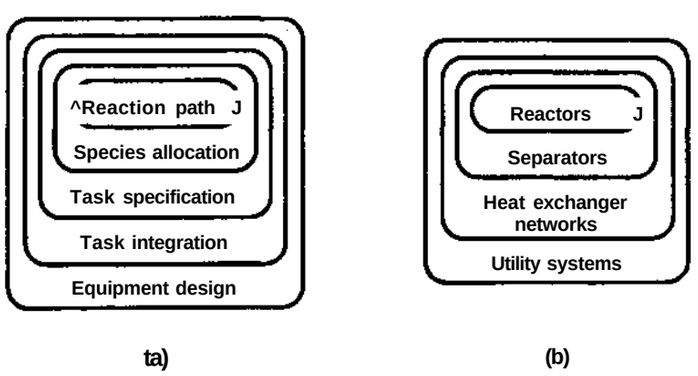

Fig. 6. Two Decomposition Schemes for Process Design, (a) the Scheme Underlying the AIDES System, (b) the Onion Diagram.

In both systems the first decision that is to be made sets the reaction scheme. Species allocation is required to determine which separations are needed; thus it is a part of both schemes. Task specification in AIDES is to establish the separations needed, then the pressure changes needed and finally the heating and cooling needed. Task integration is to

establish the heat exchange network structure. Linnhoff adds the need to establish the design of the utility system.

Mahalec and Motard [1977a,b], in the design of the Baltazar system, propose a decomposition that treats streams one at a time. Reaction, separation, heating and pressure changing tasks arc added as needed to convert input streams into the desired output streams. The final step is to integrate the heating and cooling tasks.

Douglas [1988] presents a decomposition scheme based on the decisions to be made. He argues that fewer than 1% of die ideas proposed for new designs will ever be built, and, therefore, his goal is to eliminate uneconomic designs as with as little work as possible. His approach is to keep alternatives "alive" until they can be shown to be uneconomic or less economic than another option. Implicit in his approach is that designers should make optimistic decisions when there is insufficient information available because it is expected that, even when being optimistic, the design will readily be shown to fail. Also implicit is that designers should always be trying to discover why their designs will fail, not why they will succeed. Anyone who has had a design fail after being constructed will sympathize with this attitude.

His scheme first decides if the process should be a batch or continuous one. For a continuous process, he establishes what are the feeds entering and the products, biproducts and waste streams leaving based only on selectivity information for the reactions involved. An economic potential (the value of the products less the costs for the feeds to the process) is readily established by assuming that all of the reactants entering will be recycled until they react, except those that ftiight be lost when using a gas purge stream. The potential gross profit based on the value of the products less the cost of the reactants is plotted versus the size or composition of the purge stream(s). His next level of decisions require that one know the conversions that can be attained in each reaction step, allowing him to establish the recycles flows in the process. Given the recycles flows, one can size and estimate the cost for the reactor (vessel and catalyst) and the recycle compressors. Next one designs the separation system and finally the heat exchange network.

In all these decompositions, heat integration is left as a last step. At the time it is to occur, all pressures, temperatures and stream flowrates are established. Thus the heat integration is for the "classic" heat integration problem, a problem in which each of the process streams to be heated or cooled is characterized by its flow rate, its inlet and outlet temperatures and its heat capacity versus temperature.

As indicated in the introduction and as is well known, heat integration does affect the earlier decisions. Thus, if one uses these decompositions, there is a need for a step to follow their use that allows for the earlier decisions to be altered based on the results developed by later ones. We save such a discussion for later.

We shall now look at the key results that are available for the "classic" heat exchanger network synthesis problem.

Fundamental Insights for the "Classic" Heat Exchanger Network Synthesis Problem

In this problem, we have developed a design and set all the flows, temperatures and pressures throughout it. From this design we extract a set of hot streams to be cooled and a set of cold streams to be heated. For each one is given its flow rate, its inlet temperature, its outlet temperature and its heat capacity as a function of its temperature. We may also be

given a set of available hot and cold utilities. The problem is to determine the heat exchanger network which minimizes the total annualized cost for the network - i.e., the annual cost of the utilities needed plus the annualized cost for the heat exchanger equipment

Characterizing the heat capacity of a stream versus its temperature sometimes requires one to make decisions that may not yet have been made for the flowsheet. The simple structure shown in Fig. 2 of a reactor is a case in point. Suppose the streams entering are at ambient conditions and one is a liquid Further suppose the reactor is operating at high temperature and pressure in the vapor phase. One must decide on the temperature at which to vaporize the liquid stream. To add the heat of vaporization at the lowest temperature suggests vaporizing first and then adding pressure. However, that decision would force one to use a compressor rather than a pump for adding the pressure, a decision one is unlikely to make because compressors are so expensive to purchase and operate. One is most likely to pump the liquid to the reactor pressure and then add heat, which, of course, is the worst decision one could make from the point of view of heat integration as the heat of vaporization will now have to be added at the highest temperature possible.

Any of the methodologies mentioned above could be used to develop a network for this problem. Total enumeration, for example, could be implemented by explicitly creating every possible network topology. Each can then be evaluated for feasibility against thermodynamic constraints. For each one that passes, one could carry out an optimization to establish its best economic value. Clearly such a search is too large to be carried out in this manner.

Representations and insights for heat flows in a process

To present this discussion we shall illustrate the ideas with a problem 4SP1 (4 stream problem number 1), a test problem proposed years ago by Rudd to test out his and future algorithms for heat exchanger network synthesis.

Example

Table 1 presents the stream data for problem 4SP1. The problem has two cold streams and two hot streams. Shown for each are its flowrate times its heat capacity and its inlet and outlet temperatures.

Table 1. Stream data for 4SP1.

stream	FCp(kW/°C)	Tin(°C)	Tout(°C)
C1	7.62	60	160
C2	6.08	116	260
HI	8.79	160	93
H2	10.55	249	138

Hohmann/Lockhart composite curves

Hohmann [1971], working with Lockhart, published the classic PhD thesis on network design. In one of his main results, he extended a representation by Whistler [1948] which displayed the temperature of each stream to be integrated versus the enthalpy content of that

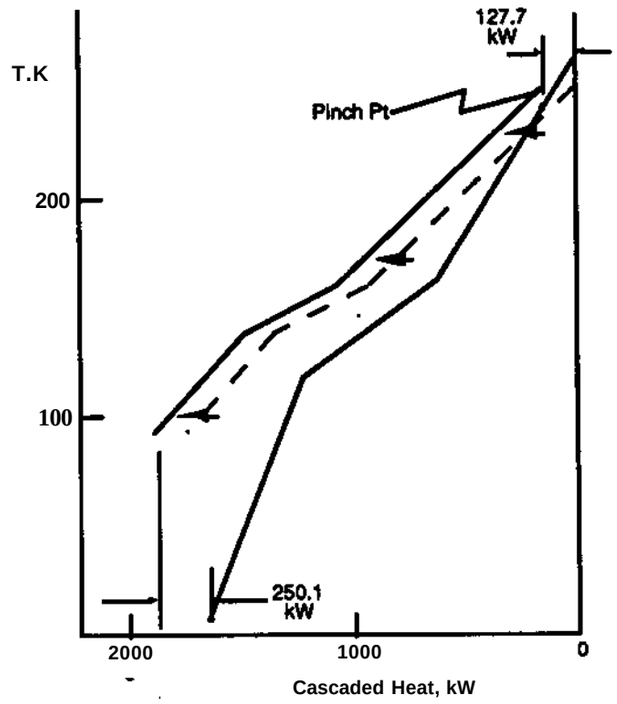

Fig. 7. Hohmann/Lockhart Composite Curves for Determining Minimum Utility Use

Table 2. "Extended" Problem Table for 4SP1 for A T ^ fixed at 10 K

Composite Hot Streams Avail Heat	Composite Hot Streams Cascaded Heat		Temperatures Hot		Temperatures Cold		Composite Cold Streams Req'd Heat	Composite Cold Streams Cascaded Heat	Grand Composite Hot and Cold Streams Net Heat	Grand Composite Hot and Cold Streams Casc'd Heat	Grand Composite Hot and Cold Streams AdjCasc'd Heat
			(270)		260	C2		**0.0**		0.0	127.7
—				7			127.7		-127.7		
	0.0	H2	249		(239)			127.7		-127.7	0.0
833.5				6		C1	480.3		353.1		
	833.5		(170)		160			608.0		225.4	353.1
105.5				5			137.0		-31.5		
	939.0	H1	160		(150)			745.0		193.9	321.6
425.5				4			301.4		124.1		
	1364.5		138		(128)			1046.4		318.0	445.7
105.5				3			164.4		-58.9		
	1470.0		(126)		116			1210.8		259.1	386.8
290.1				2			251.5		38.6		
	1760.1		93		83			1462.3		297.7	425.4
				1			175.3		-175.3		
	1760.1		(70)		60			1637.6		122.4	250.1

stream. Hohmann merged all the hot streams into a single hot stream and all the cold into a single cold stream on such a plot, producing what is now call the composite curve diagram. Plotting one of these on a transparency allows one to move one relative to the other to establish the integration possible versus the minimum approach temperature selected. Fig. 7 shows this plot with the curves moved to within 10 K of each other.

Problem table

The problem table representation of Linnhoff and Flower [1978] requires one to assume a fixed minimum temperature difference for the problem. The problem is then partitioned into temperature intervals whose demarcations are the inlet and exit temperatures for all the streams. Table 2 illustrates. A different set of streams exists in each interval.

The Hohmann/Lockhart composite curves shown above in Fig. 7 are a plot of the cascaded hot and cascaded cold columns in this table

Heat path diagram

Fig. 8 is a network illustrating these heats flows. It has been called a heat path diagram [Westerberg, 1983] which shows only legal paths for heat flow - i.e., from hotter sources to colder sinks. The figure shows a linear programming model for this problem that corresponds to writing the heat balances around each of these nodes. The objective function

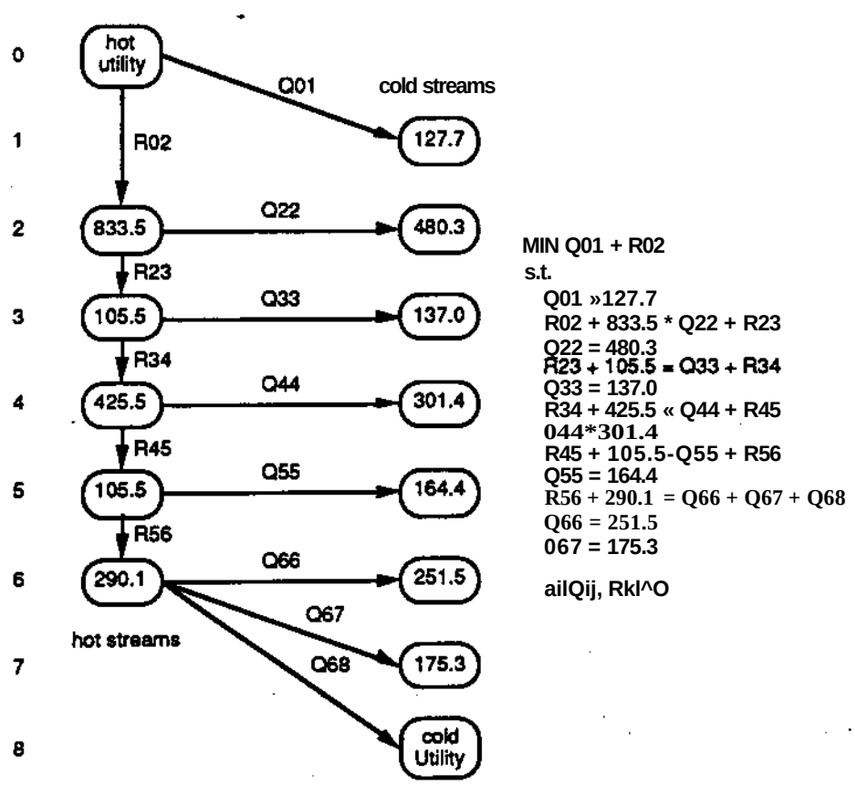

Fig. 8. Heat Path Diagram and Its Associated Linear Programming Model for Computing Minimum Utilities Required

is to minimize the amount of heat required from the hot utility.

One can extend these ideas to restricted problems where, for example, we might not permit heat to transfer from hot stream H2 to cold stream Ci. Fig. 9 illustrates.

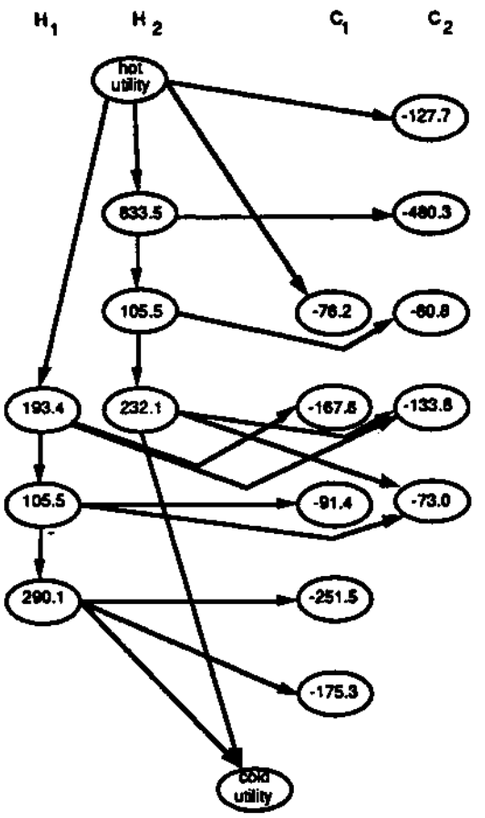

Fig. 9. "Heat path diagram" for Restricted Heat Flow Problem for 4SP1

Grand composite curve

The third column from the right in the problem table, Table 2, is the result of computing the net heat produced in an interval. It is the difference in the heat produced and the heat required. **One** can readily show that the streams in an interval can always exchange the lesser of the heat available and the heat needed in a countercurrent heat exchange without violating the minimum temperature driving force. A plot of this last column produces what is termed the grand composite curve [Itoh et al, 1982; Linnhoff 1983] - see Fig. 10.

The grand composite curve is a *breakthrough* in representation as it characterizes the net heat flow characteristics of a process versus temperature. Where the curve has a positive slope, the process is acting as a net heat sink over that temperature range; where is has a negative slope, it is acting as a net heat source. The portions on this diagram labeled as *noses* correspond to streams which are heat sources that are hotter than streams acting as heat sinks; the streams involved within these noses have the same amount of heat involved and can always be heat integrated with each other. *What is left over after cancelling the*

noses is shown as darkened curves which are the coldest temperatures at which heat can be put into the process and the hottest temperatures at which it can be removed.

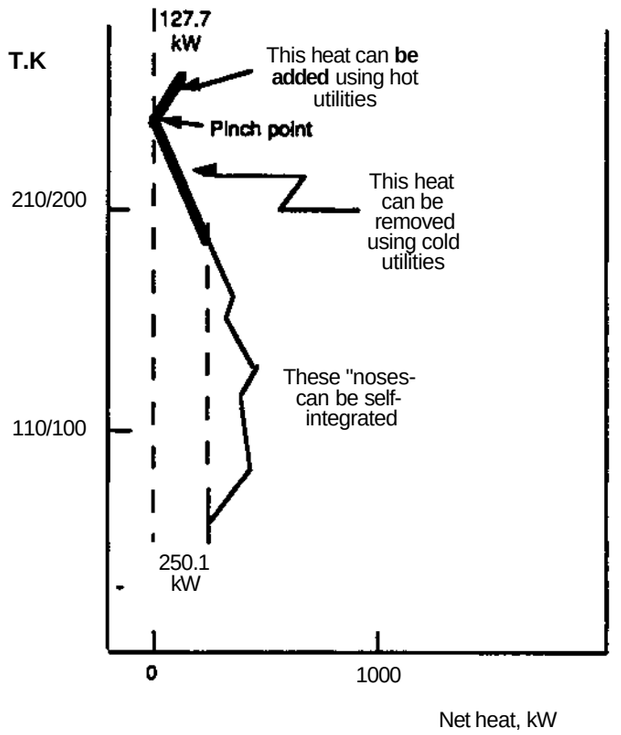

Fig. 10. Use of Grand Composite Curve to Find Temperatures at Which Utilities Are Really Needed for a Process

The pinch point

The point in the grand composite curve where the curve touches zero net heat is a pinch point for the process. Above this point the process acts high temperature heat sink while below it the process acts as a low temperature heat source. No heat can pass across the pinch point if the process is to consume minimum utilities.

Minimum number of exchanges

Based strictly **on** topological arguments, it will generally take a minimum of N-l exchanges to integrate N total hot and cold process and utility streams where the total heat available exactly matches that needed.

Area estimates

The Hohmann/Lockhart composite curves offer a way to estimate the area needed by a network. Assume that one integrates the streams so the temperature profile in each exchanger exactly follows these composite curves. We note that the incremental contribution to the area for two streams, i and j, exchanging heat is given by:

$$d\,Area = \frac{dQ}{U_y AT} \quad \frac{1}{h_i} \quad \frac{1}{h_j} \quad \frac{dQ}{AT}$$

Then an area estimate for all **the** streams in the process being integrated can be estimated as [TownsendandLinnhoff, 1984]:

$$Area \approx \sum_{i \in strms} \int \frac{1}{h_i} \frac{(FC_p)_i(T)}{AT(T)} dT$$

which is summed over all hot and cold streams. Each term contributes part of the area within any exchanger in which the stream exists. AT(T) is approximated as the temperature difference between the composite curves as a function of T.

Capital cost estimation

One can estimate the investment cost for a network as that required to purchase that estimated area in N-l exchangers. This estimate is done without creating a network to carry out the integration.

Optimal minimum temperature driving force

One can shift the Hohmann/Lockhart Composite Curves relative to each other. For each position, the plot indicates the utilities required as well as the minimum temperature driving force. Using these curves one can estimate the capital investment as just described. If the curves are too close, the investment will tend to infinity, while, as they move apart, one has to purchase more utilities. A simple plot of the annualized cost of utilities and equipment versus the minimum driving force can be used to establish the driving force which will minimize the estimated annualized cost for the equipment and the utilities.

Refinements of these results

Gundersen and Naess [1988] and Gundersen {1991] review several refinements to these insights which have appeared in the literature over the past few years. Work has been done to allow multi-pass exchangers, to allow much better area estimates, etc.

Design methodologies for the classic problem

There are two basic approaches to the synthesis of heat exchanger networks: one based on target setting using the above insights and one based on superstructure optimization, as well as methods which are hybrids of these two approaches.

Interestingly the first paper usually quoted for heat exchanger network synthesis [Hwa, 1965] used a math programming model. Each stream was partitioned into a number of equal packets of heat. The math programming model was to assign each hot packet to a cold packet so as to minimize annualized cost. If the cost is strictly that of purchasing utilities, this model predicts the minimum utility use. It suffers from the fact that the marginal cost of area for each packet is a relatively strong function of how many packets will end up being in each of the exchangers. Only a few packets will give a small

exchanger with a large marginal cost for area, while large collections of packets that become a single large exchanger will have a quite small marginal cost.

Once the idea of predicting targets became well understood, the methodology for design followed roughly the following sequence of steps.

1) Develop the composite curves.

2) Predict the best value for the approach temperature using the approach described above.

3) Partition the process at the pinch point into two independent design problems.

4) Estimate the fewest exchangers needed above the pinch and below the pinch

5) Design a heat exchanger network for the process above the pinch point. Do not allow any cold utility to be used.

6) Design a network for the process below the pinch point. Do not allow any hot utility to be used.

7) If there are more than the minimum number of exchangers involved in these two independent designs, look for *heat cycles* in the design. Attempt to remove these.

8) Treat the two problems as one and attempt to remove cycles. To do so will require that the use of utilities increase and heat will be passed across the pinch point.

The invention of the network in step 5 has been done by hand using insights - the pinch design method. It has also been done by setting up superstructures as described above and optimizing these to find the best of them. All the insights were first used to reduce the problem size.

Experience showed that the none of these methods guaranteed finding the best networks. Of late however, Gundersen [1991] reports that there are now superstructure based methods that do find the better solutions [Yee and Grossmann, 1990]. Since these problems are often nonconvex, finding such solutions is still not guaranteed.

If we were to summarize the above, we might state that the classical heat exchanger network synthesis problem is in pretty good shape. We shall now look beyond it.

Coupling Heat Integrations with Earlier Design Decisions

Heat integration has to influence earlier design decisions as it effectively reduces the cost of utilities for the process. We now look at problems where the flows and temperatures are not fixed in deciding the design.

The heat cascade diagram to aid proper placement

The first such process that we worked on in our research was to design multieffect evaporation systems [Hillenbrand, 1984; Hillenbrand and Westerberg, 1988a,b]. The design problems is to select the number of effects, the temperature levels for them as well as the heat integration. This work also included integrating the effects with a background process characterized by its grand composite curve.

Placing heat pumps, distillation columns and so forth is also in this class of problem. The representation that seems very effective to permit visualization of the heat flows is the heat cascade [Andrecovich and Westerberg, 1985]. There is also a heat cascade representation that allows one **to** determine where to place heat pumps for below ambient processes [Westerberg, 1988]. Fig. 11 illustrates the "power" of the heat cascade diagram. It shows a rather complex design which combines the heat cascade representation for a distillation column and three heat pumps with the grand composite curve for the background process.

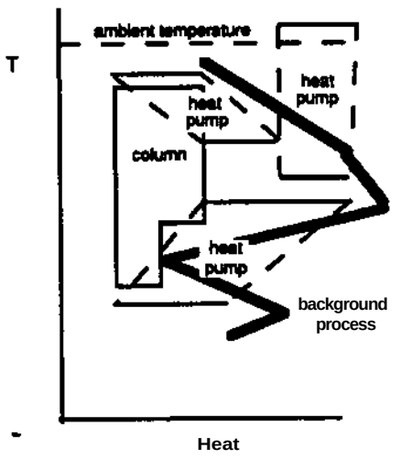

Fig. 11. Placing a Column and Heat Pumps Against the Background Process Using a Heat Cascade Representation

An interpretation of this design is as follows. The column is represented by its cascade diagram, which has heat entering it at the top (the column reboiler) and leaving at the bottom (the condenser). To permit part of the heat to be dumped from the column at a higher temperature than possible from the condenser, we have added an intercooler to the column. Terranova and Westerberg [1989] show how to compute the dimensions of this notch. The heat pump could raise its heat all the way to ambient, but it can also raise it to a temperature which is just high enough to put it back into the background process at a point where it is acting as a heat sink. This portion of the process is within a "nose" on the grand composite curve. Therefore, the heat dumped by the lowest heat pump precludes self integration of all **the heat** in this nose. We must now pump an equal amount of heat from the heat source side of **the** nose. We choose to use two heat pumps. One dumps its heat into the reboiler of the column; the other raises its heat to above ambient.

Other approaches to couple integration with earlier design decisions

Papoulias and Grossmann [1983a,b,c] present an approach to carry out the design of the process under the assumption that the process will be integrated to use minimum utilities. They used a mixed integer linear programming model to design a utility system, a heat exchanger network and finally both together. They set up a superstructure which had different alternatives embedded within it. Discrete temperature levels and flows were allowed, with integer variables used to select which to include in the final design. For each discrete choice, the composite curves could be readily constructed and the minimum utility use assessed. Duran and Grossmann [1986] later presented a method to allow the temperature levels and flows to vary continuously. A very clever problem formulation

permitted the composite curves to shift continuously and the pinch point location to move as needed.

Lien et al [1987] suggest using approximate T-Q diagrams to give guidance as to the temperature levels at which to operate distillation columns so they will heat integrate. Hows were characterized as large, medium and small in constructing these diagrams. It became rather easy to see many of the potential heat integrations without carrying out an analysis. This paper discusses the potential of using expert systems for design.

Mizsey and Fonyo [1990] presented a three step procedure for designing processes and illustrated it with three different process designs. They use Douglas[1] hierarchical decomposition to discover a number of good process alternatives. The user then interacts with these proposed designs to allow biro/her to apply knowledge the system does not have in selecting among them and to add in alternatives which the system is not programmed to create.

As pointed out before, integration reduces the apparent cost of energy for a process. Mizsey and Fonyo noted that reactor conversions for the optimal integrated processes they studied were always less than for the optimal unintegrated processes. Selectivity is typically improved at lower conversions, so more of the raw material is converted to product at lower conversions. Lower conversions, however, require more recycling of materials and thus more energy use. Cheaper apparent energy favors more energy use. They developed a bounding procedure based on this observation that allows them to eliminate designs.

Rigorous simulation is used to determine the actual costs for the different alternatives with the alternative having the highest real profits being selected. From the insights given earlier, one can readily understand the basis of their approach.

Manousiouthakis and Bagajewicz [1990] presented an interesting representation that allows one to set up complex superstructures for entire processes (where temperatures and flows are allowed to vary) in a rather straight forward manner. Parts in the superstructure can simply be mass and/or heat exchanger networks that use minimum utilities - i.e., the network can be represented only by its performance and not by the structure of the equipment

It would appear these studies have moved energy integration to the outer loop of decision making. It can be pushed out one step further, to the level of generating the original design concept itself by examining the ideas in Lien et al [1987] a bit more. In this paper they examined the manufacture of ethylbenzene using ethylene and benzene feed. The literature has two processes, a vapor phase one run at quite high temperatures and having a quite high benzene recycle and a liquid phase process at low temperatures and a moderate benzene recycle. It would seem the vapor phase process could not win against the liquid phase process, yet both are commercialized. An interesting guess is that the reaction is exothermic so that running it at high temperatures provides heat for running the distillation columns, whereas the heat of reaction from the liquid process may not be hot enough. If so one can explain why the vapor phase reaction is economically possible. The reaction is in fact exothermic and provides considerable heat A design concept which this reasoning suggests is as follows. If the heat is large enough, why not design a combined process with both the liquid phase reaction and the vapor phase reaction present. The latter can provide heat to run itself and extra heat to run the liquid phase reaction.

References

Andrecovich, M.J., and A.W. Westerberg, "A Simple Synthesis Methcxi Based on Utility bounding for Heat Integrated Distillation Sequences," AIChE J, Vol. 31, No. 3, 363-375 (1985).

Douglas, J.M., Conceptual Design of Processes, McGraw-Hill, Inc., New York (1988).

Duran, M.A., and I.E. Grossmann, "Simultaneous Optimization and Heat Integration of Chemical Processes, "AIChE J, Vol. 32,123-138 (1986).

Gundersen, T, "Achievements and Future Challenges in Industrial Design Applications of Process System Engineering," Proc. 4th Intern! Symp. on Process Systems Engineering, Montibello, Quebec, Canada, August 5-9 (1991).

Gundersen, T., and L. Naess, "The Synthesis of Cost Optimal Heat Exchanger Networks. An Industrial Review of the State of the Art," Computers chem. Engng, Vol. 12, No. 6, 503-530 (1988).

Hillenbrand, J.B., Studies in the Synthesis of Energy-efficient Evaporation Systems, PhD Thesis, Carnegie Mellon Univ., Pittsburgh, PA (1984).

Hillenbrand, J.B., and A.W. Westerberg, "The Synthesis of Multiple-effect Evaporator Systems Using Minimum Utility Insights - 1. A Cascaded Heat Representation. -EL Liquid Flowpattern Selection," Computers chem Engng, Vol. 12, No. 7, 611-624, 625-636 (1988a,b).

Hohmann, E.C., Optimum Networks for Heat Exchange, PhD Thesis, Univ. So. Calif. (1971).

Hwa, C.S., "Mathematical Formulation and Optimization of Heat Exchange Networks Using Separable Programming," AIChE-Intern. Chem. Eng. Symp. Series, No. 4, 101 (1965).

Ichikawa, A., N. Nashida, and T. Umeda, "An Approach to the Optimal Synthesis Problem," 34th Annual Mtg, Soc. Chem. Engineers, Japan (1969).

Itoh, J., K. Shiroko, and T. Umeda, "Extensive Applications of the T-Q Diagram to Heat Integrated System Synthesis," Proc. Internl Symp. Proc. Systems Engng (PSE-82), Kyoto, Japan, 92-99, August 23-27 (1982).

Lien, K., G. Suzuki, and A.W. Westerberg, "The Role of Expert Systems Technology in Design," Chcm, Eng. Sci., Vol. 42, No. 5,1049-1071 (1987).

Linnhoff, B.f "New Concepts in Thermodynamics for Better Chemical Process Design," Chem. Eng. Res. Design, Vol. 61, 207-223, July (1983).

Linnhoff, B., and J.R. Flower, "Synthesis of Heat Exchanger Networks, Part I. Systematic Generation of Energy Optimal Networks," AICHE J., Vol. 24,633 (1978).

Mahalec, V., and R.L. Motard, "Procedures for the Initial Design of Chemical Process Systems," Computers chem Engng, Vol. 1, 57 (1977a).

Mahalec, V., and R.L. Motard, "Evolutionary Search for Optimal Limiting Process Flowsheet," Computers chem Engng, Vol. 1,149 (1977b).

Manousiouthakis, V., M. Bagajewicz, "Synthesis of Distillation Networks Featuring Minimum Utility Consumption," paper 215h, AIChE Annual Mtg, Chicago, EL, Nov. 11-16 (1990).

Mizsey, P., and Z. Fonyo, "Toward a More Realistic Overall Process Synthesis - the Combined approach," Computers chem. Engng., Vol. 14, No. 11, 1213-1236 (1990).

Papoulias, S.A., and I.E. Grossmann, "A Structural Optimization Approach to Process Synthesis - I. Utility Systems. -II Heat Recovery Networks. -III. Total Processing Systems" Computers chem. Engng., Vol. 7, 695-706, 707-721, 723-734 (1983a,b,c).

Ponton, J.M., and R.A.B. Donaldson, "A Fast Method for the Synthesis of Optimal Heat Exchanger Networks by Tree Search Algorithms," AIChE J, Vol. 19,1182 (1973).

Siirola, J.J., G. J. Powers, and D.F. Rudd, "Synthesis of System Designs, III: Toward a Process Concept Generator," AIChE J, Vol. 17, 677 (1971).

Terranova, B.E., and A.W. Westerberg, "Temperature-Heat Diagram for Complex Columns. I. Intercooled/Interheated Distillation Columns," I&EC Res., Vol. 28, 1374-1379 (1989).

Townsend, D.W., and B. -Linnhoff, "Surface Area Targets for Heat Exchanger Networks," IChemE Annual Research Mtg, Bath (1984).

Wahnschafft, O.M., P. Blania, J.P. LeRudulier, M. Thomas and A.W. Westerberg, "SPLIT: II. Automated Synthesis of Hybrid Liquid Separation Systems," submitted for publication (1991).

Westerberg, A.W., "The Heat Path Diagram for Energy Management," paper 22f, AIChE Diamond Jubilee Mtg, Washington, DC, Oct-Nov (1983).

Westerberg, A.W., "Synthesis of Heat Pumps," in Biegler, L.T., I.E. Grossmann and A.W. Westerberg, Shortcourse Notes for Computer Methods for Process Design and Optimization, Carnegie Mellon Univ. (1988).

Westerberg, A.W., "Synthesis in Engineering Design," Computers chem Engng, Vol. 13, No. 4/5, 365-376 (1989).

Whistler, A.M., "Heat Exchangers as Money Makers," Petroleum Refiner, Vol. 27, No. 1, 83-86 (1948).

Yee, T.F., and I.E. Grossmann, "Simultaneous Optimization Models for Heat Integration - II. Heat Exchanger Network Synthesis," Computers chem Engng, Vol. 14, No. 10, 1165-1184(1990).