Carnegie Mellon University
Research Showcase

Department of Chemical Engineering | Carnegie Institute of Technology

1-1-1991

Evaluation of stationary state stability for the synthesis of operating procedures

Vital Aelion
Carnegie Mellon University

Jayant Kalagnanam

Gary J. Powers

Carnegie Mellon University.Engineering Design Research Center.

Follow this and additional works at: http://repository.cmu.edu/cheme

Recommended Citation
Aelion, Vital; Kalagnanam, Jayant; Powers, Gary J.; and Carnegie Mellon University.Engineering Design Research Center., "Evaluation of stationary state stability for the synthesis of operating procedures" (1991). *Department of Chemical Engineering.* Paper 179.
http://repository.cmu.edu/cheme/179

This Technical Report is brought to you for free and open access by the Carnegie Institute of Technology at Research Showcase. It has been accepted for inclusion in Department of Chemical Engineering by an authorized administrator of Research Showcase. For more information, please contact research-showcase@andrew.cmu.edu.

NOTICE WARNING CONCERNING COPYRIGHT RESTRICTIONS:
The copyright law of the United States (title 17, U.S. Code) governs the making of photocopies or other reproductions of copyrighted material. Any copying of this document without permission of its author may be prohibited by law.

Evaluation of Stationary State Stability for the Synthesis of Operating Procedures

V. Aelion, J. Kalagnanam, G. Powers

EDRC 06-112-91

University Libraries
Carnegie MeJlcn University
Pittsburgh PA 15213-3890

Evaluation of Stationary State Stability for the Synthesis of Operating Procedures

by

Vital Aelion
Department of Chemical Engineering

Jayant Kalagnanam
Department of Engineering and Public Policy

Gary J. Powers*
Department of Chemical Engineering

Carnegie Mellon University
Pittsburgh, PA 15213

ABSTRACT

The safe and reliable operation of chemical plants depends on high integrity operating procedures. Such procedures often involve process transitions through *stationary states*. A strategy for qualitatively evaluating the stability of stationary states is presented. This strategy is applied to linear processes and uses the Routh-Hurwitz conditions as a basis for analysis. The methodology requires specification of the parameter signs, and sometimes their possible equality and order of magnitude relations. The novelty of this approach relies on relaxing the requirement of detailed parameter information for the evaluation of process stability. This allows addressing stability concerns at earlier design stages than it is presently done. Since this analysis is performed at a minimal level of parameter information, it can generate process analysis and synthesis heuristics by identifying process structures which are inherendy stable. The strategy is applied in examples which involve series of material capacitors, proportional control and chemical reaction.

* Author to whom correspondence should be addressed

1. INTRODUCTION

The instrumental role of operating procedures in the safe and reliable operation of a chemical plant makes the planning of operating procedures an important chemical engineering activity. To ensure such operation, the synthesis of operating procedures must incorporate inherently desirable features, such as verifiability of procedure steps and stability of intermediate process states. The main purpose of operating procedures is to take the process from an initial to a goal state. This state transformation must be achieved by applying permissible process operations, without violating any process constraints along the way. These constraints are motivated by concerns for the safe and reliable operation of the plant. Quality control and economic issues also influence the synthesis of operating procedures.

The concerns for safety and reliability favor processes which are inherently stable over large ranges of parameter values and operating conditions. Such processes are exposed to a lower risk of undesirable scenarios like explosions, runaway reactions, and unacceptably high vessel pressure.

The design of chemical processing systems commonly is done using representations which describe the system at various levels of detail. We are interested in evaluating processes for stability early at their design stage to minimize the number of alternative operating procedures considered by pruning designs which are not expected to meet safety requirements. At the preliminary design level, however, process information such as precise equipment size, flow or heat transfer coefficients has not yet been determined or specified. It is therefore appealing to develop a formalism for evaluating stability without requiring detailed process information. In this paper stability is investigated using representations which describe the parameter values by intervals.

Moreover, the design levels in chemical engineering are hierarchical in that the properties derived at a certain level of detail are generally preserved as the granularity of the analysis increases. The proposed formalism will operate at a relatively abstract level, therefore it can provide general *design rules* for system stability.,

1.1 Recent Work in Operating Procedure Synthesis

The methodologies for operating procedure synthesis have included a variety of symbolic manipulation techniques to generate desirable plans. Fusillo and Powers (1987, 1988a & b) used a modified form of means/ends analysis, where operating goals are identified and procedural actions are sought to satisfy the goals, and a constraint guided strategy, which searches for sequences actions that do not violate the operating constraints. The methodology decomposes the complexity of the system by exploiting the existence of *stationary states,* or states where the operating goals are partially met and the system can wait. These states are used as

planning islands, **where** the status of the system can be verified before the next planning action is taken.

Lakshmanan and Stephanopoulos (1988a & b, 1989) developed hierarchical, object-oriented modelling techniques and applied them with a nonlinear planning method to synthesize operating procedures for chemical plants. Models are implemented as objects, allowing relations and methods to be inherited through the hierarchy of models. Their planning methodology involves identifying stationary states and using means/ends analysis to plan procedures for carrying the process between stationary states. The nonlinear planning techniques are based on the propagation of constraints. They also developed specific methodologies addressing qualitative mixing constraints and quantitative constraints.

Aelion and Powers (1990) developed a unified strategy for the retrofit synthesis of flowsheet structures for attaining or improving operating procedures. Their approach proposes structural modifications, aimed specifically at creating stationary states. The stationary states introduced by the structural operators increase process flexibility and add modularity and verifiability to the operating procedures. Means/ends analysis is used to backtrack from the goal to the initial state. Parts of their strategy have been implemented in a computer program, the Procedural and Structural Planner (PSP).

1.2 Operating Procedure Synthesis and Stationary States

Stationary states constitute an important factor for the effective operation of chemical plants. The fundamental role of stationary states in operating procedure synthesis becomes evident upon realizing that flexibility, safety and reliability concerns favor procedures and structures with intermediate states, where the system can wait for some time until the next action is taken. At such states the status of the system can be verified. The system can also conveniently retreat to an intermediate state to avoid complete shutdowns in emergency or maintenance situations. Strategic inclusion of stationary states into the process adds modularity to its operating procedures, thus rendering the system more flexible. Fusillo describes the characteristics of useful stationary states (1987a):

1. The system is at steady state or changing very slowly.
2. The values of (most of) the variables lie between their initial and goal-state values.
3. Connections between a subsystem and its neighbors are closed, so the subsystems do not interact.

This characterization suggests that among the important attributes of stationary states is that they are stable. However, the steady state need not be asymptotic and an oscillatory steady state of the center kind would be sufficient. In fact, the first condition of a stationary state indicates that a steady state of the focus variety which is very weakly unstable, in the sense that it is

unwinding very slowly, would be sufficient for operating procedure synthesis. In this paper, we restrict our attention to identifying stable steady states and leave the question of identifying acceptable unstable ones unexplored.

Stationary states form because of the presence of simultaneous inverse operations or large capacitance for a physical quantity, such as thermal energy or mass. An example of a stationary state is a distillation column operating at total reflux. This stationary state is realized because the evaporation at the bottom of the column is counteracted by the condensation at the top. A batch reactor may exhibit a stationary state when filled with one of two reagents and solvent and heated until it reaches a set-point temperature. The stationary state results from capacitance for thermal energy and mass. Since the second reagent is not present, the reactor contents can wait at or near the desired temperature and composition without undergoing chemical reaction.

The description offered by Fusillo and Powers can be generalized to include stationary states which are not necessarily physically isolated from their neighboring subsystems. An example is a heated stirred tank reactor which is fed with the catalyst, solvents and all the required reagents but one. The withheld reagent waits introduction after the reactor temperature is heated to a set-point value. Even though physically connected to its neighboring systems, this system exhibits a stationary state with respect to temperature. The stationarity is attributed to the inverse operations of the feed cooling the reactor contents and the heater heating them. To generalize this observation, if the stationary state is created because of inverse operations, one or both inverse operations may be inputs to the system. This situation can be alternatively analyzed by redefining the system boundaries to include the inverse operations.

Even in cases where the neighboring connections may disturbed the stationarity, the system need not be completely isolated, provided that the capacitance of the system is sufficiently larger than that of the property transporting through the system boundaries. Therefore, capacitance related stationary states need only be *effectively* isolated from its neighboring subsystems. The effect of an input to a system property may be quantified by a gain, which is the derivative of the property with respect to the input. Extensive properties normally have larger gains than intensive ones, because they are adding directly to the extensive property of the system. In contrast, intensive properties are not affected as strongly, because they subject the inputs to some form of mixing thereby moderating the resulting property changes. A system can be effectively isolated in either case if it possesses large enough capacitance to dumpen changes in its inputs.

The above analysis suggests adding a fourth characteristic for stationary states:

4. If the stationary state is capacitance related, it must be *effectively* isolated from its neighboring subsystems.

1.3 Evaluation of Operating Procedures

Operating procedures are often required to satisfy multiple conflicting objectives, which **necessitates a prioritization** among them. Most importantly, all processes must ensure a basic **standard of safety and** reliability, while providing for quality control and efficiency. Safe and **reliable** operation is related to the stability characteristics of process subsystems. In addition, stability **at** intermediate states provides for a more flexible process, which in turn may translate into economic benefits.

The synthesis of operating procedures calls for a method to evaluate the stability of process subsystems. Stability can be characterized by detailed numerical process simulation, which requires reasonably accurate values for process parameters and conditions. This information is not normally available at the preliminary operating procedure design stages. In addition, a process simulation predicts the transient system behavior for a single point in the process variable space, therefore a *what-if* analysis would require numerous simulation runs. Therefore, a preliminary evaluation method for operating procedure stability is needed for cases when precise estimates of the system parameters are not available.

In the next section we discuss the general problem of stability evaluation of operating procedures. Stability is attained for a range of values for the parameters of the system. Based on this property, interval representations for parameters are introduced and stability properties of different structures investigated.

If needed, the preliminary stability analysis of the operating procedures could be verified using detailed numerical models and pilot plant experiments. The proposed preliminary stability evaluation method will provide estimates of ranges for the process variables, hopefully improving the efficiency of the detailed stability analysis.

2. STABILITY

In this section we provide formal definitions for stability and theorems which explicate the properties of stable steady states that can be used to evaluate operating procedure stationary states.

A stable system is defined (loosely) as one that has a bounded response for all bounded inputs. A system that has an unbounded response to a bounded input is unstable (Coughanowr, 1965). For engineering applications, it is usually desirable to design systems such that they operate about stable steady states. An unstable system would run the risk of "running away" from the steady state for any disturbance. If some of the state variables are pressure and temperature, such unbounded responses could result in accidents during the operating procedures.

2.1 Definition of Stability

Consider a physical system represented by a set of *n* differential equations as follows:

$$\frac{dx}{dt} = f_i(x_1, x_2, \ldots x_n, \alpha_1, \ldots \alpha_m, u_1, \ldots u_l); \quad i = 1 \ldots n \qquad (2\text{-}1)$$

The variables JC/ are state variables, *ui* are input variables and a_x are parameters of the system. Let *X{(t)* denote the solutions of 2-1. The focus of our attention is devoted to the question of stability of the solutions *X[(t)* about the equilibrium points (or synonymously, the steady states). In this subsection, we provide the definition of stability as given by Liapounov. A more detailed treatment is provided by Minorsky (1976) and Hayashi (1985).

Definition 1 [Liapounov]

We say thatxtft) is stable, if given e>0 and x_0, there isr] = 7] (e, r_0) such that any solution x(x)for which /xi(x_0) - x[(x_0)\ < r\ satisfies /xtfx) - x\(x)\ < efor x >_x_0. If no such rj exists, xi(t) is unstable.

Definition 2

Ifxi(t) is stable, and in addition \x[{x_0) - x[(x_0)/ —>0asxtends to infinity, we say that it is asymptotically stable.

If a solution is stable then all solutions that come near it remain in the neighborhood; if it is asymptotically stable then all solutions approach it asymptotically. In the following subsections the Routh-Hurwitz conditions and Liapounov's second method are presented for operating procedure evaluation. The Routh-Hurwitz conditions provide conditions for stability of variables JC/ in the neighborhood of the equilibrium points. In contrast, Liapounov's second method allows us to investigate stability in the large or in a finite region of the state space.

2.2 Routh-Hurwitz Conditions

The linear approximation to equation 1 in the neighborhood of the equilibrium point is as follows:

$$\begin{bmatrix} \frac{dx_1}{dt} \\ \frac{dx_2}{dt} \\ \vdots \\ \frac{dx_n}{dt} \end{bmatrix} = \begin{bmatrix} a_{11} & a_{12} & \cdots & a_{1n} \\ 021 & \wedge 22 & \cdots & a_{2n} \\ \vdots & & & \\ a_{n1} & a_{n2} & \cdots & Onn \end{bmatrix} \begin{bmatrix} X\backslash \\ X2 \\ \vdots \\ Xn. \end{bmatrix} \qquad \textbf{(2-2)}$$

The characteristic equation for equation 2 is:

$$X^n + k\backslash X^{n,1} + k_2X^{n,2} + \ldots + k_n.iX + k_n = 0 \qquad \textbf{(2-3)}$$

where

$$ki = (-1)''' \wedge (i^{th} \text{ order principal minors of } A)$$

If the real parts of the roots of the characteristic equation 2-3 are negative, then the system is stable. If at least one root is positive then the system is unstable. The Routh-Hurwitz conditions are necessary and sufficient for stability.

Routh-Hurwitz Theorem

LetAe R^{nxn}, then A is stable iff (all) the following conditions are satisfied:

1. ki> 0for alii = 1,2, ...,n,and

2. all the determinants, <% shown below are greater than zero, i.e.

$$\delta_2 = \begin{vmatrix} k_1 & k_3 \\ 1 & *2 \end{vmatrix} > 0,\ \delta_3 = \begin{vmatrix} k\backslash & k_3 & k_5 \\ 1 & k_2 & k_4 \\ 0 & *1 & *3 \end{vmatrix} > 0,\ \ldots,\ \delta_n = \begin{vmatrix} k_1 & *3 & \cdots & 0 \\ 1 & k_2 & \cdots & 0 \\ \vdots & & & \\ 0 & 0 & \cdots & k_n \end{vmatrix} > 0$$

These conditions investigate the stability of a system only in the neighborhood of an equilibrium point.

2.3 The Domain of Stability

The Routh-Hurwitz conditions are a set of inequality constraints among the parameters a/yof the system. Consider a simple system with the characteristic equation shown as follows:

$$\begin{vmatrix} a\backslash i-X & an \\ an & a_{22}-\lambda \end{vmatrix} = 0$$

The Routh-Hurwitz conditions are:

$$k_1 = -(a_{11} + a_{22}) > 0$$

$$k_2 = a_{11}\,a_{22} - a_{12}\,a_{21} > 0$$

If we plot these relations in the *ki - k2* parameter space, the region of stability is in the first quadrant. In general, the Routh-Hurwitz conditions define a domain of stability (Gantmacher, 1964). This indicates that stability is not a stringent criterion which restricts the parameters to single values. Rather it constrains the parameters to lie in a domain in the parameter space. This property forms the basis for our qualitative evaluation of the stability of stationary states used in planning operating procedures.

2.4 Qualitative Analysis of Stability

The **question** of stability may be investigated at various levels of representation. The approach adopted is as follows: A qualitative representational level is chosen, say (+, 0, -) where the parameters of the system are represented by the intervals (+, 0, -). For this resolution, different structures of differential equations characterized by the matrix A in 2-2 are investigated in terms of the stability criteria given by the Routh-Hurwitz conditions or Liapounov's Second Method. The attempt is to identify all the classes of structures that can proved to be stable at this level of representation. This analysis is done for (+, 0, -) and order of magnitude representations. This approach is expected to provide a taxonomy for various representations. The representations chosen for investigation are motivated by the characteristics of stationary states, commonly found in chemical plant operating procedures.

The immediate question that arises is the issue of how to divide the real line into intervals. The most commonly used representation in the qualitative reasoning literature is based on the (+ 0 -) value set. In general, the real line can be divided into a larger number of intervals. If we consider the subdivisions to be symmetric about 0, then n divisions of the positive real line will generate $2n + 1$ intervals on the real line. For $n = 1$, the 3 intervals are (+ 0 -). If $n = 2$, the 5 intervals are (++, +, 0, -, --). In a similar fashion, we can divide the real line into a large number of intervals, such that as n approaches infinity, the set of values become infinite and represent the whole line. Such a hierarchy of divisions will provide a hierarchy of representations for stability evaluation. The appropriate value of n will depend on the domain of application, which will decide the precision required in the solutions.

The approach to qualitative reasoning adopted in this paper is based on Interval Analysis which is suggested by the AI literature (de Kleer, 1984; Kuipers, 1984; Raiman, 1986; Mavrovouniotis and Stephanopoulos, 1988) and originally by the literature in mathematical economics and ecology (Samuelson, 1947; Quirk, 1968; Jeffries, 1977). Recent interest in this approach among control engineers is suggested by Ishida et al. (1981) and Kuipers (1989). The different qualitative representations differ in the degree of resolution with which variables and parameters of a given system are represented.

2.5 Qualitative Representations

In this section some results of the stability analysis conducted at three representational levels are presented. Systems are classified based on the length of the feedback loops that are present in the structure of the differential equations 2-2. The different levels at which this analysis is presented are:

2.5.1 (+ 0 -) Representation

This **level represents** interactions (gains) between state variables as being (+ 0 -). The **matrix A** in **equation** 2-2 which represents the interactions (for a local linearization) is such that it's elements are (+ 0 -).

The necessary and sufficient conditions for stability at this level of representation were presented by Jeffries (1977). A system that is stable based only on sign considerations is called *sign stable.* The necessary and sufficient conditions for sign stability indicate that only systems with feedback loops of length 2 can be captured at the (+ 0 -) level of representation. **The** length of a feedback loop, n, is determined by the the presence of the following non-zero elements in a matrix: anj2 ^{a}i2,i3 — ^{a}in,il-

The necessary and sufficient conditions for sign instaility enumerate the cases for which one or more of the Routh-Hurwitz conditions are violated based on sign considerations alone. A formal statement is presented in Kalagnanam (1990a). If a given system is not sign stable, then these conditions can be used to check for sign instability. If a given system is sign unstable then no further analysis is required since any additional information on the interactions in the matrix A in equation 2-2 will not alter the result. However, if the system is neither sign stable or unstable then it is potentially stable. A potentially stable system can be forced to be stable by further restricting the values of the interactions in matrix A. This implies that the (+ 0 -) representation is inadequate to determine the stability of the given system and a greater level of detail is required. Since the concepts of sign instability and potential stability are complementary, the conditions for sign instability are key for determining if a given system is potentially stable.

2.5.2 (+ 0 - =) Representation

This representation is the same as the previous one, with the addition of equality relationsbetween variables. The symbol "=" means that two variables have the same magnitude, without without considering signs. For example, if a2i = a22> then a2i, a22 have the same magnitude and this fact is represented by assigning the same symbol to both, i.e. a = a2i = a22-

A set of sufficient conditions for stability at this level is presented. These conditions are such that they capture systems with *one* feedback loop of length n_y over and above the cases listed in the (+ 0 -) representation. The necessary and sufficient conditions for sign stability and instability at this level of representation are left as open questions.

The structure of the differential equations which satisfy the sufficiency conditions is as follows:

$$\begin{bmatrix} -a_1 & 0 & \cdots & 0 & 0 \\ a_2 & -42 & 0 & \cdots & 0 \\ 0 & Oh & -a_3 & \cdots & 0 \\ \vdots & & & & \\ 6 & \cdots & 0 & On & 'On \end{bmatrix}$$

This is a block diagonal matrix with a corner element. The proof for this result can be found in Kalagnanam (1990b).

2.5.3 Order of Magnitude Representation

This level represents the order of magnitude of the different interactions in matrix A. The (+ 0 - =) representation is augmented with the relations: (>, », <, «) . The relation a// > (<) *aij* represents the fact that *aij* is larger (smaller) than a*/. Similarly, *ay* » («) a*/represents that *aij* is much larger (smaller) than a*/. The semantics for this representation is based on Mavrovouniotis and Stephanopoulos (1988).

The stability analysis at this level of representation consists of investigating the Routh-Hurwitz inequality constraints with some assumptions about the order of magnitude of the parameters ***a***^

The stability of a system depends on the interaction between a regulatory mechanism, which dumps the output for perturbations in the input, and an enhancing factor, which amplifies the input disturbances. The regulation could be self-regulation or negative feedback. The enhancing factors could be positive feedback or self-enhancement. Restrictions on the order of magnitude of the gains are often sufficient for inferring whether the regulatory factor dominates, thereby concluding that the system is stable.

3. EXAMPLES

In this section the Routh-Hurwitz conditions are applied in a series of operating procedure stationary state examples. The analysis starts at the level of gain signs. If the. gain sign information is not sufficient for determining stability, then the analysis proceeds with order of magnitude arguments for stability evaluation. The purpose of this methodology is to provide heuristic arguments for stability reasoning at the preliminary design level. A hierarchical approach to design is applicable and conclusions reached at this level of abstraction will be applicable as the detail of the analysis increases.

3.1 A **Series** of Material Capacitors

Consider a chemical process subsystem which consists of a precooler, a reactor and a splitter, as shown in Figure 3-1. Species A and B react at high temperature to form C. At medium temperature the reaction leads to an unwanted product, U. A and B enter the

precooler at constant flowrates fA and fB moles/sec respectively. The flowrates between units and the outputs from the system are also constant.

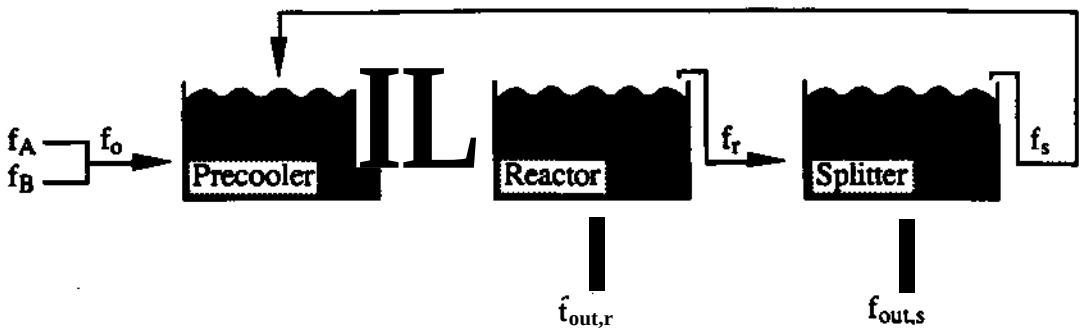

Figure 3-1. A Reactor Subsystem

The reactor contents are to be kept at a low temperature to avoid all reactions during startup. The precooler is included because the reactor configuration does not allow the cooling to be achieved inside the unit. The side-stream out of the reactor, $f_{out,r}$> is for purging and sampling. Part of the material in the splitter is recycled back to the precooler.

A part of an operarting procedure for starting up this unit requires that the reactor composition be established. The stability with respect to composition is under investigation. We assume a well mixed precooler, reactor and stream splitter and negligible pipeline volume, as compared to that of the overflow vessels. We also assume that the total input to the system is equal to its output, $f_0 = f_{Ouu} + f_{out,s}$-

Under these conditions the unsteady state mole and composition balances for each processing unit are provided below.

Precooler: $$\frac{dn_p}{dt} = f_o + f_s - f_p \qquad \text{(i)}$$

$$\frac{dn_{Ap}}{rt} = \frac{dn_p x_p}{dt} = x_{Ap}\frac{dn_p}{dt} + n_p\frac{dx_{Ap}}{dt} = f_o x_{Ao} + f_s x_{As} - f_p x_{Ap} \qquad \text{(ii)}$$

After substituting (i) into (ii) and cancelling opposite terms, we get:

$$\frac{dx_{Ap}}{dt} = \frac{f_o+f_s}{n_p} x_{Ap} + \frac{f_s}{n_p} x_{As} + \frac{f_o x_{Ao}}{n_p} \qquad \text{(I)}$$

Similarly, for the *reactor* and *splitter* we get:

$$\frac{dx_{Ar}}{dt} = \frac{f_g}{n_r} x_{Ap} - \frac{f_p}{n_r} x_{Ar} \qquad \text{(II)}$$

$$\frac{dx_{As}}{dt} = \frac{f_r}{n_s} x_{Ar} - \frac{f_s}{n_s} x_{As} \qquad \text{(HI)}$$

where n_{Ai} = moles of A in unit i

n_i = total moles in unit i

X_{Ai} = mole fraction of A in unit i

f = flowrate, $\left[\frac{\text{moles}}{\text{hr}}\right]$

Combining equations (I), (II) and (III) in matrix form we get $\frac{dx}{dt} = Ax + B$.

$$\text{where } x = \begin{bmatrix} x_{Ap} \\ x_{Ar} \\ x_{As} \end{bmatrix}, \quad A = \begin{bmatrix} -\frac{f_o+f_s}{n_p} & 0 & f_s \\ k & & \\ n_r & n_r & \\ 0 & \frac{f_r}{n_s} & -\frac{f_r}{n_s} \end{bmatrix}, \quad B = \begin{bmatrix} \frac{\quad}{n_p} \\ 0 \\ 0 \end{bmatrix}.$$

Defining Q_j s -^, we get $A = \begin{bmatrix} -(C_{op}+C_{sp}) & 0 & C_{sp} \\ C_{pr} & -C_{pr} & 0 \\ 0 & C_{rs} & -C_{rs} \end{bmatrix}$.

The C_{ij}'s are positive, so $A = \begin{bmatrix} - & 0 & + \\ + & - & 0 \\ 0 & + & - \end{bmatrix}$.

The system can be treated as linear if we assume that n_j's are approximately constant in the time interval of interest. Stability is guaranteed if the Routh-Hurwitz conditions are met.

$k_1 = C_{op} + C_{sp} + C_{pr} + C_{rs} > 0$

$k2 = (C_{op} + C_{sp})\, C_{pr} + C_{pr}\, C_{rs} + C_{rs}\, (C_{op} + C_{sp}) > 0$

$k3 = C_{op}\, C_{pr}\, C_{rs} > 0$

§2 = ki k2 - k3 > 0

83 = k_3 52 > 0

The signs of the parameters and the equality relations render the expressions true for all numerical values.The Routh-Hurwitz conditions indicate that the subsystem is stable with respect to composition provided that the inputs remain positive. The signs of the parameters along with the equality relations are sufficient for characterizing stability. Note that the structure of the matrix A in this example is the same as the one presented in Section 2.6.2 except for the extra input term in ai 1. This structure is in general stable.

The analysis has shown that the outputs play no role in the subsystem's stability. Therefore it is not necessary to require that the inputs be equal to the outputs. If the total input

exceeded the total output for a long enough time to flood the system, the present analysis would not have detected it, because it has been set up to address only the stability with respect to composition.

We can generalize the results of this example by noting the following heuristic.

The stationary state created by a series of capacitors for an extensive property (moles) is always stable with respect to the corresponding intensive property (concentration), provided that the input(s) to the system are positive.

3.2 Material Capacitors with Composition Control

The startup method of the previous example will work only if the feed composition is identical to the reactor composition set-point, XAsp- If the feed composition does not remain constant, composition control will have to be employed. Figure 3-2 presents the new configuration. The controller is proportional and modifies the incoming composition by readjusting the flows f^ and fe while keeping the total feed flow, f_0, constant.

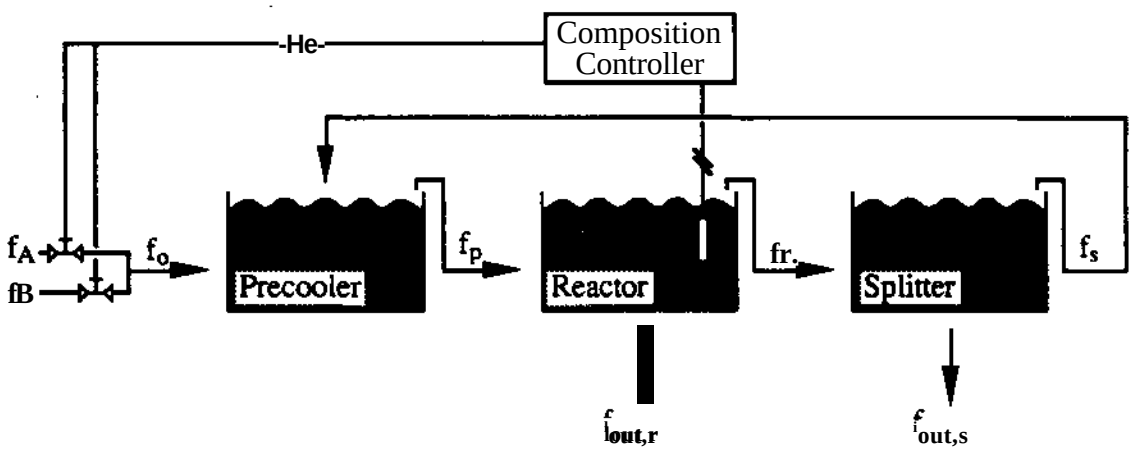

Figure 3-2. Introduction of a Composition Controller

dx

The system is described by the matrix ^ = Ax + B, where

$$x = \begin{bmatrix} "XAO" \\ XAp \\ XAr \\ XAS \end{bmatrix}, \quad A = \begin{bmatrix} 0 & 0 & -K & 0 \\ \frac{f_o}{n_p} & -\frac{fn+fs}{n_p} & 0 & \frac{k}{n_p} \\ 0 & \frac{f_p}{n_r} & -\frac{f}{n_r} & 0 \\ 0 & 0 & \frac{k}{n_s} & -\frac{k}{n_s} \end{bmatrix}, \quad B = \begin{bmatrix} Kx_{Asp} \\ 0 \\ 0 \\ 0 \end{bmatrix}.$$

Using the Cy notation, A = $\begin{bmatrix} 0 & 0 & -K & 0 \\ Cop & -(Q>p^{+}Csp) & 0 & Csp \\ 0 & C_{pr} & -C_{pr} & 0 \\ L\,0 & 0 & C_{r_S} & -C_{rs} \end{bmatrix}$. **Also, A =** $\begin{bmatrix} 0 & 0 & - & 0 \\ + & - & 0 & + \\ 0 & + & - & 0 \\ L & O & O & +-J \end{bmatrix}$.

Note again that all Cy's are positive. The Routh-Hurwitz conditions are as follows.

$$ki = C_{op} + C_{sp} + C_{pr} + C_{rs} > 0$$

$$\mathbf{k_2 = (C_{op} + C_{sp})\, Cpr + Cp_r\, C_{rs} + C_{rs}\,(Cop + C_{sp}) > 0}$$

$$\mathbf{k3 = C_{op}\, C_{pr}\,(K + C_{rs}) > 0}$$

$$k4 = K C_{op} C_{pr} C rs > 0$$

$$82 = ki\, k_2 - k_3 =$$

$$[C_{op} + C_{sp} + C_{pr} + Crs][(C_{O}p + C_{sp})\, C_{op} + C_{pr}\, C\wedge + Crs\,(C_{op} + C_{sp})]$$

$$-(K + C_{rs}) C_{O}p\, Cpr > 0$$

$$83 = ki\, k_2\, k3 - k_j^2\, k_4 - k_3^2$$

$$84 = k4\, 83$$

The necessary conditions, ki > 0 are satisfied purely on sign and equality considerations. The sufficient conditions, 8i > 0, can be satisfied by assuming that all the elements in matrix A are approximately of the same magnitude, C, and K ≤ C. For this analysis we assume the upper limit, K * C. Under these assumptions the analysis indicates that the system is stable.

Consider 82 = ki k_2 - k_3; k] * 4 C, k_2 * 5 C^2 and k_3 « 2 C^3. The results are obtained:

$$82 \ll 20C^3 - 2C^3 \sim 18C^3 > 0$$

$$83 = 40C^6 - 20C^6 \ll 20C^6 > 0$$

$$84 = k4\, 83 > 0$$

This analysis suggests that if the proportional control constant, K, is not larger than the size of the rest of the parameters Qj then the given structure is stable. This is a sufficient condition for stability.

These results can be summarized in the following heuristic:

// the capacitances of the vessels are approximately equal, the described stationary state is stable provided that the proportional controller gain, K, is not larger than the average capacity. Since Cifs are measures of inverse capacitance, the smaller the capacitance, the better the stability of the system.

33 Material Capacitors with Temperature Control

A part of the startup problem is to maintain a low reactor temperature. Consider a situation with isomolar feed, fA = fB» where **medium** temperatures promote the undesirable exothermic reaction A + B -> U, with reaction rate, qj = k [A] [B],

Species U precipitates from the solution and is be removed from the bottom of the reac-

tor. One procedure plan involves adding a proportional **controller to the** flowsheet, which tries **to keep the reactor** temperature at or below a set-point value, Tsp. To avoid recycling hot material, **the downstream** valve from to the splitter is now closed until the reactor temperature is achieved. It **is assumed** that the set-point temperature may be reached before exhausting the reactor capacity **for** material. We assume constant heat capacity, c_p, for both the reactor and precooler mixtures. **Figure** 3-3 shows the flowsheet configuration.

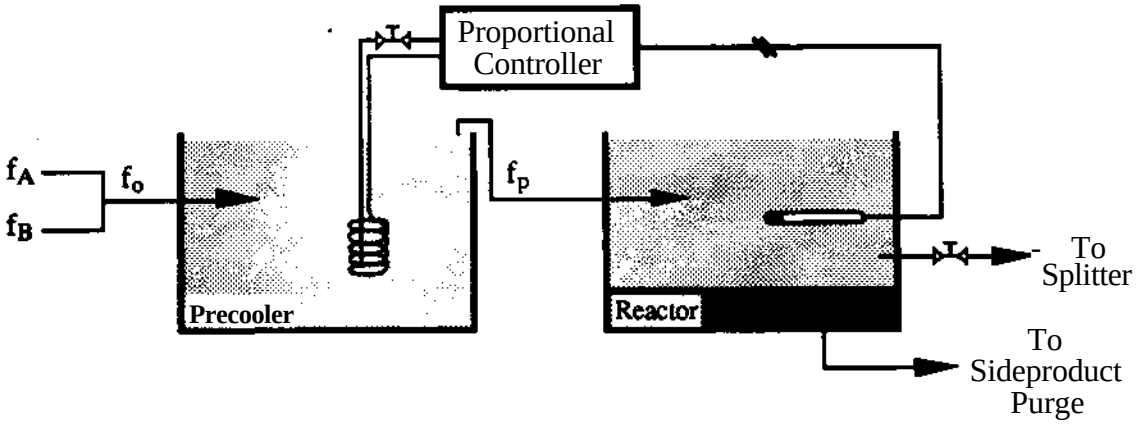

Figure 3-3. Introduction of a Temperature Controller

The system is described by the following equations.

Precooler Energy Balance:

$$m_p c_p \frac{dT_p}{dt} = f_o C_p T_o - f_p C_p T_p + Q_c \qquad \text{(a)}$$

$$Q_c = K_c (T_{sp} - T_{ui}) \qquad \text{(b)}$$

Q_c is the rate of heat generation from the controller. Combining (a) and (b) we get

$$m_p c_p \frac{dT_p}{dt} = f_o c_p T_o - f_p c_p T_p + K_c (T_{sp} - T_{th}) \qquad \text{(c)}$$

Reactor Energy Balance:

$$m_r c_p \frac{dT_r}{dt} = f_p C_p T_p + Q_{rxn} \qquad \text{(d)}$$

$$Q_{rxn} = k\,[A]\,[B]\,(-\Delta H_{rxn}) \qquad \text{(e)}$$

Qrxn is the heat generation from the reaction. The feed is isomolar, so [A] and [B] remain constant, because they are depleted at the same rate. We assume constant AH^n and linear k with the reactor temperature, $k = X\,T_r$. Defining M **s** X [A] [B] (- AHrxn), a new constant, produces the following reactor energy balance.

$$m_r c_p \frac{dT_r}{dt} = f_p c_p T_p + M T_r \qquad \text{(f)}$$

Temperature Sensor Energy Balance:

$$m_{ts} c_{p,ts} \frac{dT_{ts}}{dt} = hA\,(T_r - T_{ts}) \qquad \text{(g)}$$

In the equation above Cp_{jts} and A are the heat capacity and the area of the temperature sensor respectively, and h is the heat transfer coefficient between the sensor and the reactor liquid.

Combining equations (c), (f) and (g) in matrix form we get $\dot{T} = AT + B$, where

$$T = \begin{bmatrix} T_p \\ T_r \\ T_{ts} \end{bmatrix},\ A = \begin{bmatrix} -\frac{la}{mp} & 0 & \frac{-K_c}{m_p c_p} \\ \frac{k}{m_r} & \frac{M}{mrCp} & 0 \\ 0 & \frac{hA}{m_{ts} c_{p,ts}} & \frac{-hA}{m_{ts} c_{p,ts}} \end{bmatrix},\ B = \begin{bmatrix} K_c T_{sp} \\ 0 \\ 0 \end{bmatrix}.\ \text{Also, } A = \begin{bmatrix} -an & 0 & -ai3 \\ a21 & a22 & 0 \\ 0 & a_{32} & -a_{33} \end{bmatrix}.$$

Note that one diagonal element in matrix A is positive. The system can, therefore, become unstable even without the interactions across units, represented by the off-diagonal terms. In physical terms the positive element, a22. represents the exothermic reaction which can promote itself through the reaction constant and drive the system unstable unless counteracted by the remaining diagonal elements. The Routh-Hurwitz conditions are as follows:

$$k_1 = a_{11} + a_{33} - a_{22} > 0$$

$$k_2 = a_{11} a_{33} - a_{11} a_{22} - a_{22} a_{33} > 0$$

$$k_3 = a_{13}\, a2i\, a_{32} - an\, a_{22}\, a_{33} > 0$$

$$2 \qquad 2 + a_{11} a_{22}^2 + a_{33} a_{22}^2) - (a_u a_{22} + 3\, a_{11} a_{22} a_{33} + a_{22} a_{33}^2 > 0$$

$$82 = (a_t j\, a33 + aii\, a_{33}$$

$$63 = k_3\, 52 > 0$$

In this example no Routh-Hurwitz conditions are satisfied based on the (+, 0, -, =) representation. An order of magnitude restriction of the parameters, an = an = a2i = a32 = a33 = a and a22 « a, i.e. the reaction term is much smaller than the other terms in the matrix, gives conditions under which these assumptions are sufficient for stability. The following results are obtained:

$$ki = 2a - a22 > 0$$

$$k2 = a\,(a - 2a22) > 0$$

$$k3 = a^2\,(a - a22) > 0$$

$$52 = a^2\,(2a - 5a22) > 0$$

$$5_3 = k_3\, 52 > 0$$

These results have shown that the Routh-Hurwitz conditions are satisfied provided that a_{22} is at least one order of magnitude smaller than a. Therefore the order of magnitude assumptions have been sufficient for guaranteeing stability.

The following heuristic may be deduced from this example:

If the effect of the exothermic reaction ((122) is much smaller than the effect of the other elements then the described system is stable. This condition is sufficient for stability.

4. DISCUSSION

The renewed interest in qualitative reasoning within the AI literature has made available various formalisms for qualitative representations. These formalisms provide a springboard for qualitatively investigating traditional problems in engineering like stability. This paper presents an integration of ideas from control theory and qualitative reasoning applied in the context of the process plant start up.

The examples in the previous section illustrate that the stability of a system can be guaranteed with qualitative parameter estimates. In examples 3.1 and 3.2 the parameters are specified at the (+, 0, -, =) level of representation which is sufficient for satisfying the Routh-Hurwitz conditions. In example 3.3 order of magnitude assumptions about the parameters are shown to be sufficient for guaranteeing the stability of the system. This suggests that for any given representational level there exist some restrictions on the structure of the system which are sufficient for proving stability. As the investigation extends to more detailed levels of qualitative representations, additional stable structures will become available for operating procedure problem solving. This paper presents a methodology to explore this direction further.

The qualitative analysis of stability emerged from the fields of economics and ecology. The initial focus of this work was restricted to the (+, 0, -) representation and Jeffries (1977) proved that at this level of resolution *systems with feedback of length no greater than two* can be shown to be stable. This result was of significance in ecology where the predator-prey models have feedbacks of length two. Engineering domains, however, are more complex in that systems are generally designed with feedback of larger lengths, as illustrated by example 3.1. In order to reason qualitatively about the stability of feedback systems with lengths greater than two the (+, 0, -) representation is inadequate.

Examples 3.1 and 3.2 illustrate that the (+, 0, -, =) representation is sufficient to prove stability in some cases, suggesting that the (+, 0, -, =) level is a suitable candidate for further investigations. This level of representation has been used to show that capacitors in series (example 3.1) are inherently stable. This result can be generalized to a *nxn* matrix structure which allows for feedback of length *n*. The (+, 0, -, =) level has been used in example 3.2 to

Engineering 14, 301-317 (1990).

Mavrovouniotis M. L. and G. Stephanopoulos. Formal order-of-magnitude reasoning in process engineering. *Computers and Chemical Engineering* 12, 867-880 (1988).

Minorski N. *Nonlinear Oscillations.* R. E. Krieger Publishing Company, NY (1974).

Quirk J. The correspondence principle, a macroeconomic application. *International Economic Review* 9, 294-306(1968).

Raiman O. Order of magnitude reasoning. *Proceedings of the Sixth National Conference on Artificial Intelligence. AAAI-86.* Philadelphia, PA, 100-104 (1986).

Samuelson, P. A. *Foundations of Economic Analysis.* Harvard University Press, Cambridge, MA (1955).

illustrate that a system with 2 feedback loops of length three is stable. This suggests that a whole class of structures may be proven stable at this level. The necessary and sufficient conditions for stability at this level is an open question.

Example 3.3 presents a system for which the (+, 0, -, =) level is inadequate to reason about stability. Stronger assumptions about the relative magnitudes of the elements in matrix A are required to prove the stability of the system. This suggests that order of magnitude representations might yield another class of qualitatively stable structures.

5. CONCLUSIONS

High integrity operating procedures utilize stationary states for the safe and reliable operation of chemical processes. The analysis of stability is a critical aspect of evaluating stationary states. In the context of the process plant start up, this problem is confounded by the unavailability of precise information regarding the parameters of the system. Three examples are presented which illustrate how qualitative descriptions of the parameters are often sufficient for reasoning about stability. The qualitative analysis of stability brings to bear some results from the qualitative reasoning literature in AI, mathematical economics and ecology.

Qualitative analysis of stability based on the signs of parameters may be used for systems with feedback loops of length no greater than two. In this paper, we introduce the (+, 0, -, =) and the order of magnitude representations and extend the scope of qualitative stability analysis to systems with feedback loops of length greater than two. At the (+, 0, -, =) level, we present sufficiency conditions which guarantee stability for systems with one feedback loop of length n (number of state variables). It is indicated how at each representational level, classes of stable structures may exist. It is also illustated that this analysis can provide analysis and synthesis heuristics by identifying process structures which are inherently stable.

6. ACKNOWLEDGEMENT

This work was supported by the National Science Foundation, Division of Design and Manufacturing Systems and the NSF Grant IRI-880-7061.

7. REFERENCES

Aelion V. and G. J. Powers. A unified strategy for the retrofit synthesis of flowsheet structures for attaining or improving operating procedures. Submitted for publication to *Computers and Chemical Engineering.*

Coughanowr D. R. and L. B. Koppel. *Process Systems Analysis and Control.* McGraw-Hill Book Company, NY (1965).

de Kleer J. and J. S. Brown. Qualitative physics based on confluences. *Artificial Intelligence* 24, 7-84 (1984).

Fusillo R. H. and G. J. Powers. A synthesis method for chemical plant operating procedures. *Computers and Chemical Engineering* 11, 369-382 (1987).

Fusillo R. H. and G. J. Powers. Computer-Aided planning of purge operations. *AIChE J* 34, 558-566 (1988a).

Fusillo R. H. and G. J. Powers. Operating procedure synthesis using local models and distributed goals. *Computers and Chemical Engineering* 12, 1023-1034 (1988b).

Gantmacher F. R. *The Theory of Matrices, Vol. II.* Chelsea Publishing Company, NY, (1964).

Hayashi C. *Non-linear Oscillations in Physical Systems.* Princeton University Press, NJ, (1985).

Ishida Y. Using global properties for qualitative reasoning: A qualitative system theory. *In Proceedings of the Eleventh International Joint Conference on Artificial Intelligence. IJCAI-89.* Detroit, MI, 1174-79(1989).

Ishida Y., N. Adachi and H. Tokumam. Some results on the qualitative theory of matrix. *Trans, of the Society of Instrument and Control Engineers* 17, No. 1,49-55 (1981).

Jeffries C. Qualitative stability and digraphs in model ecosystem. *Ecology* 55, 1415-1419 (1974).

Kalagnanam J. Qualitative analysis of system behaviour. *Technical Report, Department of Engineering and Public Policy, Carnegie Mellon University, CMU-EPP-1990-01-02* (1990a).

Kalagnanam J. Qualitative stability analysis: (+, 0, -, =) representation. *Technical Report, Department of Engineering and Public Policy, Carnegie Mellon University, CMU-EPP-1990-08-01* (1990b).

Kuipers B. Commonsense reasoning about causality: Deriving structure from behavior. *Artificial Intelligence* 24, 169-204 (1984).

Kuipers B. Qualitative reasoning: modelling and simulation with incomplete knowledge. *Automatica* 24, No. 4, 571-585 (1989).

Lakshmanan R. and G. Stephanopoulos. Synthesis of operating procedures for complete chemical plants. Part I: Hierarchical, structured modelling for nonlinear planning. *Computers and Chemical Engineering* 12, 985-1002 (1988a).

Lakshmanan R. and G. Stephanopoulos. Synthesis of operating procedures for complete chemical plants. Part II: A nonlinear planning methodology. *Computers and Chemical Engineering* 12, 1003-1021 (1988b).

Lakshmanan R. and G. Stephanopoulos. Synthesis of operating procedures for complete chemical plants. Part III: Planning in the presence of qualitative mixing constraints. *Computers and Chemical*