Carnegie Mellon University
Research Showcase @ CMU

Department of Chemical Engineering | Carnegie Institute of Technology

1987

# Stochastic optimization of flexibility in retrofit design of linear systems

Efstratios N. Pistikopoulos
*Carnegie Mellon University*

Ignacio E. Grossmann

Carnegie Mellon University.Engineering Design Research Center.

Follow this and additional works at: http://repository.cmu.edu/cheme

This Technical Report is brought to you for free and open access by the Carnegie Institute of Technology at Research Showcase @ CMU. It has been accepted for inclusion in Department of Chemical Engineering by an authorized administrator of Research Showcase @ CMU. For more information, please contact research-showcase@andrew.cmu.edu.

**NOTICE WARNING CONCERNING COPYRIGHT RESTRICTIONS:**
The copyright law of the United States (title 17, U.S. Code) governs the making of photocopies or other reproductions of copyrighted material. Any copying of this document without permission of its author may be prohibited by law.

**Stochastic Optimization of Flexibility in Retrofit Design of Linear Systems**

by

E. Pistikopoulos and I. Grossmann

EDRC-06-36-87

# STOCHASTIC OPTIMIZATION OF FLEXIBILITY IN RETROFIT DESIGN OF LINEAR SYSTEMS"

Efstratios N. Pistikopoulos and Ignacio E. Grossmann*
Department of Chemical Engineering
Carnegie-Mellon University
Pittsburgh, **PA. 15213**

AUGUST 1987

"Author to whom correspondence should be addressed

«*This work was performed at Cornell University in 1986-87 while Ignacio Grossmann was the Mary Upson Visiting Professor and Efstratios Pistikopoulos a Visiting Scholar in the School of Chemical Engineering

University Libraries
Carnegie MeHon University
Pittsburgh, Pennsylvania 15213

**ABSTRACT**

In this paper the problem of obtaining the degree of flexibility that maximizes the total profit in an existing process flowsheet is addressed. Assuming a linear model for the process and given probability distribution functions for the uncertain parameters, the curve relating the expected revenue to the flexibility index is generated. An efficient stochastic optimization method is developed for this purpose that is coupled with a parametric analysis. This then allows to determine the level of flexibility in a retrofit where the proper trade-off is established between investment cost and expected revenue. Two examples are presented to illustrate the proposed procedure.

## INTRODUCTION

Currently in the chemical industry there are few new plants that are being built. Instead the emphasis has shifted towards the improvement of the operation and profitability of existing plants (see Cabano, 1987, Linnhoff and Smith, 1985). Main motivations include potential for reducing energy consumption, enhancement of product quality through better monitoring and control, increased need to effectively handle uncertainties, such as variations in feedstocks and production levels. It is the latter aspect, namely, the one of redesigning an existing plant so as to optimally increase its flexibility in the face of uncertainties that will be addressed in this paper.

There have been several approaches to the problem of design under uncertainty reported in the literature. Grossmann *et al* (1983) present an extensive overview of different approaches. Among these, only few have considered stochastic optimization methods for the design of flexible processes (e.g. Weisman and Holzman, 1972, Lashmet and Szczepanski, 1974, Johns *et al,* 1978, Malik and Hughes, 1979). Most recently, Pai and Hughes (1985) proposed a stochastic optimization scheme that combines experimental design with gradient-based NLP methods, such as the SQP algorithm. Reinhart and Rippin (1985) also presented two methods for the optimum design of multi-product plants taking account of uncertainty in product demands. The first method uses a penalty function for the objective function to account for the failure to meet the demand, whereas the second one uses a two-stage programming procedure. However, none of these works has been aimed specifically towards retrofit design problems.

The problem that will be addressed in this paper is the one of finding the optimal increase of flexibility that will maximize the total profit in an existing process flowsheet whose performance is described through a linear model. One of the major issues in this problem is how to determine the proper trade-off between the investment cost for the retrofit and the expected revenue that will result from having an increased flexibility.

Previous work by the authors (Pistikopoulos and Grossmann, 1987) has

concentrated on the problem of redesigning a flowsheet to achieve a specified degree of flexibility at minimum cost. Reduced LP and MILP formulations that explicitly include flexibility constraints were proposed, and for which one can easily develop the trade-off curve relating flexibility to retrofit cost. In order to determine the economically optimal degree of flexibility, this work will be focused on developing the revenue curve as a function of flexibility. The major challenge here lies in how to efficiently integrate the expected optimal revenue of the process given distribution functions for the uncertain parameters and constraints that need to hold for feasible operation.

In the method proposed in this paper a number of redesigns with specified degree of flexibility will be obtained from the trade-off curve relating retrofit cost to flexibility. For these designs the corresponding expected optimal revenue will be evaluated through a modified Cartesian Integration Method. This method consists of partitioning the vector of the uncertain parameters through sensitivity analysis and reducing the problem to one-dimensional integrals. Consequently, it will be shown that this integration can be performed analytically by the use of a range analysis that determines the appropriate active constraints for the domain of the integration. Two examples will be presented to illustrate the suggested procedure.

## PROBLEM STATEMENT

The specific problem which is to be addressed in this paper can be stated as follows: Assume that an existing process flowsheet is given with fixed equipment sizes $d^E$ and fixed structure. A set of uncertain parameters *d* is also provided. Continuous distribution functions for the vector *0* of the uncertain parameters are also specified. The problem is then to determine the required changes of the design variables d that will provide a flexibility that maximizes the total profit, consisting of the difference between expected revenue and retrofit cost.

The quantitative measure for flexibility to be used will be the flexibility index F, as introduced by Swaney and Grossmann (1985). This index corresponds to the largest scaled hyperrectangle that can be inscribed within the parametric region of feasible operation. Therefore, this index provides a measure on the size of the

parameter space over which the design is guaranteed to have feasible operation. Furthermore, this index accounts for the fact that process adjustments can De made during operation through control variables z.

The problem as stated above corresponds to a stochastic semi-infinite programming problem. Firstly, because the expected revenue must be determined in terms of parameters that are defined by probability distribution functions. Secondly, because the region defined by the flexibility index, which is the one where the design must have feasible operation, contains an infinite number of values of the uncertain parameters. In order to define more precisely the scope of this problem, the following basic assumptions will be made:

1. The performance of the process is described through a linear model.
2. The revenue of the process is strongly dependent on the uncertain parameters.
3. The expected revenue will be quantified over the feasible parameter space defined by the flexibility index F.
4. The uncertain parameters vary independently of each other.

The first assumption on linear models is made to simplify the complexity of the problem and to gain some insight for tackling the nonlinear case. The second assumption can be expected to hold in many cases since usually in a process the uncertainties that are involved include product demands, feedstocks, prices, which clearly have a great impact in the revenue function. The third assumption will tend to underestimate the revenue since the actual feasible region may be larger than the one implied by the flexibility index. However, since this region contains the points with highest probability the underestimation will usually be small. Also, the third assumption avoids the difficulty of quantifying penalties for infeasible operating conditions. The fourth assumption has been stated for the sake of simplicity in the presentation. The basic procedure to be proposed can actually be extended to the case of correlated parameters.

A qualitative representation of the retrofit design problem of this paper is shown in Figure 1. As it can be seen, increased flexibility leads on the one hand to increased retrofit cost, and on the other hand to increased expected revenues.

Therefore, the objective will be to determine the flexibility value, F\ that optimizes the profit Z as given by the difference between expected revenues and retrofit cost. Pistikopoulos and Grossmann (1987) have developed efficient procedures that are based on parametric LP and MILP models to determine the curve of retrofit cost as a function of flexibility that is shown in Figure 1. This work will therefore concentrate on the problem of estimating the curve of the expected revenues shown in Figure 1. A systematic procedure will then be presented to determine the optimal degree of flexibility and will be illustrated with two example problems.

**PROBLEM FORMULATION**

For a specified target value of flexibility index F, the problem of determining minimum investment cost changes of the existing design can be formulated as the following MILP problem (see Pistikopoulos and Grossmann, 1987):

$$C(F) = \min_{y,Ad} \; c^T y + /?_i^T Ad$$

$$\text{s.t.} \quad \left.\begin{aligned} & \delta^k \geq F \\ & \delta^k = \delta^k_o + \sum_{i=1}^{r} \sigma_i^k \, \Delta d_i \end{aligned}\right\} k=1,..,n_{AS} \qquad \text{(P1)}$$

$$-U_i^- y_i \; £ \; Ad \; £ \; U.y_i \;, y_i=0,1 \;, i=1,..,r$$

$$\delta^k \geq 0, \; k=1,..,n_{AS}, \; Ad \in R^r$$

where C(F) = retrofit investment cost at the flexibility index value F

$y_i$ = is a binary 0,1 variable associated with the change $Ad_i$,i=1,.,r

$Ad_i$ = change of the design variable $d_i$

$S_Q^k$ = flexibility index for existing design of k'th active set of constraints

$<r_i^k$ = sensitivity coefficient of flexibility associated with design variable $d_i$ for

k'th activp set of constraints

F = specified flexibility index value

c,/S = vectors of cost coefficients

As shown in Pistikopoulos and Grossmann (1987), the retrofit cost C(F) in (P1) can be obtained as a piecewise linear function of the flexibility index F (see Figure 1).

In the present work revenue considerations are also taken into account in order to maximize the profit Z with respect to flexibility. By assuming that the expected revenue is evaluated over the parameter space defined by the flexibility index F, this problem can be represented conceptually in the following way:

$$\max_{y,Ad,F} Z = \underset{0GT(F)}{E} \{ \max_{z} r(z,0) \mid f(d,z,0)£O \} - \phi(y,Ad) \qquad \text{(PO)}$$

$$\text{s.t.} \quad g(y,Ad,F) \le 0$$

$$d = d^E \cdot Ad$$

where

Z = profit as given by expected revenues minus retrofit cost

E = expected value of the revenue over the parameter set T(F)

T(F) = *id* | *6"* - FA0" £ *6* £ *d"* • FA0[4] }, is the parameter set defined by the flexibility index

r(z,0) = $a_0 + a_2 z + a_3$ *6,* is the linear revenue function

z = vector of control variables with dimension n

f(d,z,0) = bj + $(b_1^j)^T$ d • $(b_2^j)^T$ z * $(b_3^j)^T$ *6* £ 0 , j€J, are linear constraint functions

$\phi$(y,Ad) = $c^T y$ • $JS^T Ad$ is the cost function in (P1)

g(y,Ad,F) is the constraint set in (P1)

$d^E$ = vector of design variables for the existing system

Problem (PO) is in general very difficult to solve. To simplify this problem, it is convenient to consider that the maximization of the profit will be constrained to having minimum investment cost as given by problem (P1). This then leads to the following formulation:

$$\max_{F} \quad Z = R(F) - C(F)$$

$$\text{s.t. } C(F) = \min_{y,Ad} \; [\, c^T y \bullet \wedge^T Ad \,] \qquad \text{(P)}$$

$$\text{s.t. } g(y,Ad,F) \; £ \; 0$$

where the expected revenue R(F) is given by :

$$R(F) * \underset{0GT(F)}{E} \{ \max_{z} \; r(z,0) \;|\; f(d,z,0) \; £ \; 0 \}$$

$$\text{s.t. } T(F) = \{ 8 \;|\; 0^N - FA0'' \lesssim 6 \; £ \; 6'' \bullet FA0^* \} \qquad \text{(P2)}$$

$$d = d^E \bullet Ad$$

$$Ad = \arg[C(F)]$$

Note that the advantage of formulation (P) is that its solution can be decomposed through the solution of problem (P1). That is, for a given value of the flexibility index F the design changes Ad that minimize the investment cost, C(F), can be determined from problem (P1). The expected revenue, R(F), in problem (P2) can then be evaluated for the design changes Ad obtained from problem (P1).

In general problem (P) will only provide an approximation to problem (PO). However, as shown in Appendix A, the formulation in (P) is exactly equivalent to problem (PO) if the revenue of the process is only a function of the uncertain parameters *6,* i.e. r(z,0) = r(0). If the revenue is a function of both *d* and z problem (P) will provide a lower bound to the optimal profit in (PO). Since, the revenue is

commonly dominated by the parameters *6,* as is being assumed in this paper, prcblem (P) should provide in general a very good approximation to (PO).

The following general strategy is proposed in order to tackle problem (P) to determine the optimal degree of flexibility:

1. Determine the curve of retrofit cost versus flexibility, C(F). This involves solving problem (PI) parametrically as a function of F.
2. Generate the curve relating revenue to flexibility, R(F). This involves solving problem (P2) parametrically as a function of F and with the design variables obtained from (P1) for the given value of F.
3. Construct the composite curve of the total profit versus flexibility, Z=R(F)-C(F), in order to determine the optimal degree of flexibility F\ shown in Figure 1.

Note that step 1 involves the procedure described in Pistikopoulos and Grossmann (1987). This paper concentrates on steps 2 and 3. In step 2 the expected revenue R(F) will be estimated at different fixed values of F. With these points, the expected value of the revenue function R(F) will be obtained through a polynomial approximation. Fixed values of F on which to estimate R(F) will typically correspond to the break points in the curve for C(F) and any additional points that may provide a desired degree of accuracy in the approximation.

The estimation of the expected revenue function R(F) at a fixed value of F is by itself a very difficult problem due to two reasons:

- General approximation techniques for evaluating the multiple integral of the expected revenue in (P2) can be computationally very expensive.
- Integration of the expected revenue must account for the changes in the active constraints that are economically optimum in (P2) for the different parameter values.

In the next section a Modified Cartesian Integration Method will be presented to circumvent the first difficulty.

**MODIFIED CARTESIAN INTEGRATION METHOD**

For a fixed value of the flexibility index F the revenue function R(F) must be evaluated over the n^ uncertain parameters *8* that are contained in the parameter set T(F), and for values of the design variables that result from the solution of problem (P1). In this section it will be shown that this can be effectively accomplished by a modified Cartesian Integration Method.

For simplicity, it will be assumed firstly that the uncertain parameters $6_i$ vary independently with corresponding continuous density functions $p_i(0_i)$. Each uncertain parameter $6_i$, i=1,.,n0 is defined in T(F) through the flexibility index F, to lie in the interval $[0_i^L, 0_i^U]$ where:

$$\left.\begin{aligned} e_i^L &= e_i'' - F\, Ad_i \\ 0_i^u &= 0_i^N + F\, A<9_i^* \end{aligned}\right\} \quad i=1,\ldots,n_\theta \tag{1}$$

where $Ad_i''$, $Ad_i^4$ are negative and positive deviations. These deviations correspond in general to a specified level of confidence through the density function $p_i(0_i)$, as seen in the example of Figure 2.

The basic idea of the Cartesian Integration Method (see Bereanu, 1980) is to approximate the multiple integral of the expected revenue over the region in (1) through Gaussian quadrature of n^-1 uncertain parameters, and the evaluation of one-dimensional analytical integrals in terms of a single uncertain parameter $d_m$ at each of the nodes of the quadrature formula. Its major drawback, however, is that the number of nodes that must be considered for the n^-1 parameters in the Gaussian quadrature formula increases very rapidly as the number of uncertain parameters increases. In particular, if L points are selected for each of the n^-1 parameters, the number of nodes for the integration is equal to $L^{<n}0''^{1)}$ (see example in Figure 3). Therefore, a more effective way must be developed for the particular case of evaluating the expected revenue.

In order to accomplish the above task, the vector of the uncertain parameters *6*

will be partitioned into three subsets as follows:

$$6 = \begin{bmatrix} 6 \\ \theta_m \\ \theta_D \\ \theta_S \end{bmatrix}$$

where $6$ is a single independent parameter that exhibits the largest sensitivity to the revenue,

$d_D$ is a vector of dimensionality D^1 with significant sensitivities to the revenue, and

$0_S$ are the remaining uncertain parameters of dimensionality S whose sensitivity to the revenue can be neglected.

The basic idea for the partitioning is to choose only few of the uncertain parameters that are the most sensitive to the economics of the process in order to simplify the evaluation of the multiple integral of the expected revenue. Under the assumption that the revenue function r(z,0) will be essentially independent of the subset $\#_s$ of the uncertain parameters, the application of the Cartesian Integration Method can be performed much more effectively as then the number of nodes need only be specified for the subset $0_Q$. Then, the conditional expected value in terms of the single parameter $6_m$ and the parameters $0_g$, will be estimated using a Gaussian quadrature formula for $L^D$ nodes, where L is the number of points selected for each parameter in $d_Q$. At each node the analytical solution of a one-dimensional integral in $6_m$ will be performed as will be shown later in this paper.

In order to apply the Gaussian quadrature, each of the parameters $\#_{Dj}$, i=1,2,.,D, will be fixed at L points within the interval $[0_{D_i} \backslash \#_{DJ}{}^U 3$. For each uncertain parameter $0_{D_i}$ the L points will be denoted by the index $1._i$ = 1,.., L Since $L^D$ nodes are required for the quadrature formula, they will be labelled by the set Q={q}, where each node q is given in terms of the points $I_i$ by the equation:

$$q = I, + \sum_{i=2}^{D} L^{1*1} <*_s * {}^1> \qquad <2)$$

As an example, consider two parameters in $0_Q$ each involving L=3 points. The

node corresponding to point 2 of $\theta_{D1}$ ($\ell_1$=2) and point 3 of $\theta_{D2}$ ($\ell_2$=3) is then labelled as q=8.

From the Gaussian quadrature formula, at each node q a weight $w_q$ is assigned and its location $\theta_D{}^q$ is defined in terms of the roots $t_{\ell_i}$ for each parameter k as follows (see Carnahan *et al*, 1969):

$$\theta_{Di}{}^q = \frac{1}{2}(\theta_{Di}{}^U - \theta_{Di}{}^L)\, t_{\ell_i} + \frac{1}{2}(\theta_{Di}{}^L + \theta_{Di}{}^U), \qquad \theta_i{}^q \in \theta_D,\ i=1,2,..,D \tag{3}$$

The expected revenue over the whole parameter set T will then be approximated by the following Cartesian Integaration formula whose derivation is given in Appendix B:

$$R(F) = M \sum_{q \in Q} w_q\, R_q(F) \prod_{i=1}^{D} p_i(\theta_{Di}{}^q) \tag{4}$$

where $M = 2^{-D} \prod_{i=1}^{D} (\theta_{Di}{}^U - \theta_{Di}{}^L)$

$R_q(F)$ = conditional expected revenue for $\theta_m$ and $\theta_s$ at node q

$w_q$ = weight for Gaussian quadrature at node q

It should be noted that in this way, at each node q, the values of the uncertain parameters $\theta_D$ will be fixed and the problem reduces to the evaluation of the conditional expected revenue function $R_q(F)$ in terms of the single uncertain parameter $\theta_m$ and the constant parameters $\theta_s$. The evaluation of this conditional expected revenue can be performed analytically by one-dimensional integrals in $\theta_m$ as will be shown later in the paper (eqtn. (10)).

The proposed implementation of the modified Integration Method to estimate the revenue term R(F), will then consist of the following steps:

1. Partitioning of the vector *6* of the uncertain parameters in $6_m$, $d_Q$ and $0_g$ according to their economic sensitivity. Definition of the set $\#_D^q$ at each node q, qGQ.

2. Evaluation of the conditional expected value of the revenue objective function $R_q(F)$ at each node q through a one-dimensional integral in $d_m$. As will be shown later this requires the identification of subintervals for the integration of $R_q(F)$.

3. Evaluation of the expected revenue as given by equation (4)

The first two steps will be discussed in the following sections.

**PARTITIONING OF THE UNCERTAIN PARAMETERS**

The single uncertain parameter $6_m$ and the subset $d_Q$ will be selected as the ones which have the greatest economic sensitivities of the revenue function for the existing design $d^E$ at the nominal parameter $6^N$. These parameters can be obtained by solving the following LP problem where the revenue is maximized with respect to the control variables z at the nominal parameter values, $6^H$ and at the existing design $d^E$:

$$\max_z \; r(z,0^N) = \max_z \; [a_Q \bullet a\hat{} \; d^E \bullet a_2^T \; z + a_3^T \; 0^N]$$

$$\text{s.t.} \quad f.' * b_o^j + (b,^1)^1 \; d^E \bullet (b_2^j)^T \; z \bullet (b_3^j)^T \; 8^N \; Z \; 0 \qquad j€J \tag{5}$$

This LP will yield the multipliers $X_j$ for the constraints $f_j$, j€J. Since $X_j$=-dr(z,$\#^N$)/8$f_j$, the variation of the revenue with respect to each parameter $6_i$ is given by:

$$\frac{\partial r}{\partial \theta_i} * -\sum_{j\in J} X_> \frac{8 f.}{Tt_i} \quad M_{\text{I}} \_ n_* \tag{6a>}$$

The economic sensitivity can then be defined as the potential revenue over the expected deviations by the equation:

$$r_i = \begin{cases} (\Delta\theta_i^{+}) \dfrac{\partial r}{\partial \theta_i} & \text{if } x_n \geq 0 \\ -(\Delta\theta_i^{-}) \dfrac{\partial r}{\partial \theta_i} & \text{if } \dfrac{\partial r}{\partial \theta_i} < 0 \end{cases} \tag{6b}$$

In this way, $\theta_m$ is selected as the one for which $r_m = \max\{r_i\}$, and $\theta_D$ as the next few uncertain parameters that have largest $r_i$. Note, that in this way the uncertain parameters which are the most sensitive to the economics of the process are selected for the evaluation of the expected conditional revenue $R_q(F)$. Qualitatively, the reason for these selections is that the approximation of the revenue function will tend to be more accurate if it is based on the parameters that play the most important role on the economics of the process.

## EVALUATION OF THE CONDITIONAL EXPECTED REVENUE FUNCTION

At each node q, the conditional expected revenue function $R_q(F)$ in equation (4) will be of the following form:

$$R_q(F) = E_{\theta_m, \theta_S} \left[ \max_z r(z, \theta_m, \theta_S, \theta_C \mid \theta_n^q) \right] \tag{7}$$

$$= \int_{\theta_m^L}^{\theta_m^U} \int_{\theta_S^L}^{\theta_S^U} \max_z r(z, \theta_m, \theta_S, \theta_D^*) \, p_m(\theta_m) \, d\theta_m \prod_{i=1}^{S} p_{Si}(\theta_{Si}) \, d\theta_{Si}$$

Here $r(z, \theta_m, \theta_S, \theta_D^*)$ is the conditional revenue function for fixed values of $\theta_D^*$ which involves as variables the vector of control variables z and as parameters $\theta_m$ and $\theta_g$. However, since the revenue is essentially invariant to $\theta_g$, these parameters can be fixed at their nominal value $\theta_g^N$. Equation (7) can then be rewritten as:

$$R_q(F) = \int_{e_m^L}^{e_m^u} \left( \max_z r(z, \theta_m \backslash 0^H_S . e^*) pie_D \, _m)dd_m \right] \left[ \int_K \prod_1^s p_{Si}(\theta_{Si}) d\theta_{Si} \right] \tag{8}$$

Note that the above integral is separable in $d_m$ and $0_g$. The integration in $0_S$ can be easily performed given analytical distribution functions. The integration of the expected revenue in $6_m$ reduces to a one-dimensional integral where the optimization of the revenue function at a given value of $6_m$ will be given by:

$$\max_z \; r(z, 6 \; I \; 0_C^N, 0_n^q)^s \max_z \; a_n \cdot a,^T d \cdot a_{\_}^T z \cdot a_{\_}^T \begin{bmatrix} e_m \\ \theta_D^q \\ \theta_S^N \end{bmatrix} \tag{9}$$

$$\text{s.t.} \qquad bj + (bl)^T d \cdot (b_2^j)^T z \cdot (b_3^j)^T \begin{bmatrix} \\ \theta_S \end{bmatrix} \leq 0$$

where d corresponds to the design determined from problem (P1) at the given value of the flexibility index F.

The integration of the first term in equation (8), is not trivial since the optimal basis of problem (9) will in general change with $6_m$ in the interval $[0^L, 6_m^u]$. This implies that the integrand of the first integral in (8) is in general piecewise linear as seen in Figure 4. Therefore, it will be necessary to identify the different subintervals in $id_m^L, 6_m^u]$ over which the optimal basis of problem (9) changes. For this reason, equation (8) will be expressed as:

$$inn_q = \left( \% \sum_{e_m^{k\text{-}1}}^{n_R} \int_{e_m^k} rid_k)p_{mm}\{6_m)dd_m \right] \left[ \int_{\theta_S^J}^{\theta_S^u} \prod_{**}^{s} p_{Si}(\theta_{Si}) d\theta_{Si} \right] \tag{10}$$

where k«1,.,$n_R$ is the index for the $n_R$ optimal bases, $6_m^\circ = 6_m^L$, $6_m$"R * $6_m^u$, and

$r_*(8_m)$ is the revenue function corresponding to interval $\{8_m^{k'} \backslash 8_m^k]$. As will be shown in the next section this revenue term can be expressed explicitly in terms of $8_m$.

## IDENTIFICATION OF SUBINTERVALS

In order to compute equation (10), it is necessary to identify the different $n_R$ subintervals for the integration. By having only one independent uncertain parameter $d_m$ one can use range analysis information (Schrage, 1986) to determine changes in the optimal basis of problem (9) to identify the sequence of points $8_m^k$, k=1,.,$n_R$ with $8_m^\circ = 8_m^L$, $8_m^{n_R} = 0_m^u$ that are required in (10). Also, through this range analysis one can generate explicit expressions for the revenue $r_k(\#_m)$ for the integration of equation (10).

The following procedure is suggested for the evaluation of $R_q(F)$ at each node q for the given value of the flexibility index F:

STEP 1: Set $B_m^\circ = d_m^N$ - FA0" and the subinterval counter k = 0.

STEP 2: a) By partitioning $a_3=[a_4, a_g, a,]$. $b_3^j=[b_4' \backslash b_g>, b_6^j]$ for $18_m$. $8J$. $0_S^N]$ problem (9) can be reformulated as:

$$\max_z \; r(z, d_m^k \backslash 0''_S, d^*)_D - \max_{b,z} a_{\circledR} * a,^T d + a,^T 2 + a_{4m}/ 6^k + a_{5D}/ d^* + a_6/ 8_5'' \tag{11}$$

$$\text{s.t.} \quad (b_2^j)^T z + (b_4')^T a \wedge -[b_o^j * (b/)^7 d + (b_s^j)^T(9_0^q * (b_e^j)^T \wedge_S^N], \; j€J$$

$$a = 8_m''$$

where a is a scalar variable that is equal to $6_m^k$, and d corresponds to the design variables predicted by (P1).

b) Formulate the dual problem of (11):

$$r_k(8_m^*) - \min_{M'P} -T_{jGJ} [ bj + (b/)^T d * (b_5 i)^T <?_D'' + (b_e')^T 8^*1_S \;,,. \; ,^* \; 8_m^k \; P$$

$$\text{s.t.} \quad \sum_{j \in J} b_j^{\prime} * a_2 \qquad (12)$$

$$\sum_{j \in J} b_4^j \mu_j + \rho \geq a_4$$

where $\mu_j$ ($\mu_j \geq 0$), $j \in J$ and $\rho$ are dual variables corresponding to the two constraints in (11).

The solution of the dual problem (12) will indicate the constraints which are active, and thus constitute the optimal basis through the non-zero multipliers $\mu_j$. It will also determine the value of $\rho$ which is the sensitivity coefficient of the change of the revenue with respect to the independent uncertain parameter $d^k$.

STEP 3: a) Do range analysis on the solution of the dual problem (12) (Schrage, 1986). This will provide a value of $\Delta\mu_m$ such that the basis will remain unchanged.

**b) set** $e_m^{k+1} = e_m^k * \Delta d_m^k$

c) Determine the revenue as a linear function of $\delta_m$ as follows:

$$r_{km}(\delta_m) = r_{km}(d_m^k) - \rho_*(d_m - d_m^k) \qquad (13)$$

since $\rho_* = -\delta r / d\delta_m$.

d) If $d_{mm}^{k+1} \leq \delta_m^u$, set $\delta_m^{k+1} = d_{mm}^k$, and go to step 4. Otherwise, set k=k+1,

return to step 2.

**STEP 4: The** conditional expected revenue $R_q(F)$ is calculated as follows:

$$R_q(f) = \left[\sum_{k=1}^{R} \int_{e_m^{k-1}}^{e_m^k} u(e_m^k) - \rho_*(\delta_m - e_m^k)\right] p_m(d_m)\, d\delta_m \Big] \left[\int_{\theta_s^L}^{\theta_s^U} f_{k+1}^{*} \prod_{i \neq j} p_{Si}\, e_{Si}\, d_{Si}\right] \qquad (14)$$

where the one-dimensional integrals in the summation are determined

analytically.

## ALGORITHMIC PROCEDURE

Based on the analysis presented in the previous section an algorithmic procedure can be developed to find the optimal degree of flexibility when redesigning an existing chemical plant with a linear model. After obtaining the trade-off curve relating retrofit cost to flexibility target, as described in Pistikopoulos and Grossmann (1987), problem (P2) is solved for different fixed values of F. A polynomial approximation is then considered to construct the revenue versus flexibility trade-off curve:

Step 1. a) Construct the retrofit cost versus flexibility trade-off curve, C(F) by solving problem (P1) parametrically in F (see Pistikopoulos and Grossmann, 1987).
b) For a set of N+1 flexibility values $\{F^1\} = \{F°, F\ .\ , F^N\}$, $(F° = F^B)$ obtain the corresponding set of design variables values $\{d^1\} = \{d^E, d^1, ., d^N\}$.

Step 2. a) Solve the LP problem in (5) to maximize the revenue for the existing design $d^E$ at the nominal point $0^N$.
b) Partition the vector of uncertain parameters *6* into the three subsets, *8 , d^,* $0_e$ according to their sensitivity coefficients in (6a) and (6b).

Step 3. For each value of flexibility $F^i$, i=0,1,.,N and its associated design variable $d^1$:

a) Determine the intervals $[0.^L_i, 0.^u_i]$ as given in (1).

b) Fix the subset $6_D$ at the $L^D$ nodes for the Gaussian quadrature by determining $6_Q{}^q$ as in (3) and by labelling the nodes as in (2).

c) For each node q€Q, compute the conditional expected revenue R $(F^1)$ from (14) using the procedure described in the previous section.

d) Compute the expected revenue $R(F^j)$ from equation (4).

Step 4. Using polynomial approximation, fit a curve for R(F) using the points $[F^j, R(F^*)]$, i=0,1,.,N.

Step 5. Given the curves for R(F) and C(F) determine with a one-dimensional direct search procedure the degree of flexibility $F^\#$ that maximizes $Z^s$ R(F) - C(F).

It should be noted that the accuracy of the solution will clearly depend on the

number of nodes selected in step 3(b). However, as has been observed by Beureanu (1980) usually only a modest number of nodes need to be considered.

## EXAMPLES

Two examples will be considered to illustrate the application of the proposed algorithmic procedure. The first one will be a small linear example, which will serve to illustrate the detailed steps of the procedure. Two different revenue objectives functions will be considered which correspond to extreme cases : the one when the revenue function is only a function of the control variable z, and the second one with a revenue function only in terms of the uncertain parameters 0. The effect of the number of nodes for the integration will also be considered. The second one will be the linearized model of a simple flowsheet problem with five uncertain parameters, which serves to show the potential of the procedure, when the number of uncertain parameters increases.

## EXAMPLE 1

Consider that the specifications of a design are represented by the following inequalities:

$$f_1 = z - B_y \cdot 0.5\ d_2 \cdot d_1 - 3\ d_2 \pounds\ 0$$

$$f_2 = -z - 0/3 - 6_2 \cdot d_2 + 1/3 < 0 \qquad (15)$$

$$f, - z \cdot \wedge - J_2 \cdot d, - 1\ i\ 0$$

These inequalities involve a single control variable z, two design variables d^ $d_2$, and two uncertain parameters $6_y$. $6_2$. The values of the existing design variables are $6_1$**3 and $d_2^E$=1. The two uncertain parameters $6_V$ $9_2$ are assumed to have normal distribution functions N(2,2). Hence, for a level of confidence of 70%, the expected parameter deviations are $A5_1$*»A^$_1$"» $A0_2$*=$A0_2$"=2. Two cases will be considered for the revenue functions: (a) r(z)=10z; (b) *r(d)*M}$0_y$- $29_2$* ($\$10^3$/yr). Finally, the investment cost for the redesign is assumed to be given by the linear function with no fixed

cost charges: $c(\Delta d)=10\Delta d_1+10\Delta d_2$ ($\$10^3$/yr).

Since the flexibility index for the existing design is $F^E=0.636$ (calculated as in Pistikopoulos and Grossmann, 1987), the question to be answered is what is the flexibility value $F^*$ that maximizes the total profit, consisting of the difference between the expected revenue and the cost for the modifications for the two cases. Applying the suggested algorithmic procedure the following results are obtained at each step for the revenue $r(z)=10z$ in case (a):

1. (a). By applying the procedure in Pistikopoulos and Grossmann, 1987, the trade-off curve in Figure 5 was developed that relates retrofit cost to flexibility. This curve consists of two segments. The first segment is characterized by one limiting active set $(f_1,f_2)$, for which the corresponding changes of the design variables at F=0.81 are $\Delta d_1=0$, $\Delta d_2=0.335$. The second segment is characterized by the active sets $(f_1,f_2)$, $(f_2,f_3)$, with corresponding design changes $\Delta d_1=1.335$, $\Delta d_2=1.335$ at F=1. This result then implies that a redesign with $d_1=4.335$ and $d_2=2.335$ will exhibit a flexibility index of 1.0 at a minimum cost for the modifications of $\$2.7\times10^4$/yr.

(b) Choose the flexibility values $\{F^i\}$ = {0.63, 0.81, 1.0} and their corresponding design variables $\{d^i\}$ = {(3,1), (3,1.335), (4.335,2.335)}.

2. At $d^E$ = (3,1) and $\theta^N$=(2,2), by solving the LP in (5) the corresponding economic sensitivities are: $\tau_1=20$, $\tau_2=10$. Since $\tau_1>\tau_2$, $\theta_m=\theta_1$ is chosen as the single independent parameter and $\theta_D=\theta_2$. Note that here there are no $\theta_S$ (S=0) since there are only two parameters.

3. For $\{F^i\}$ = {0.63, 0.81. 1.0} details will only be presented for $F^o=0.63$.

(a) From equation (1) with the values $\Delta\theta^+=\Delta\theta^-=2$ and $F^o=0.63$ the corresponding intervals are: [0.728, 3.272] for $\theta_1$ and [0.728, 3.272] for $\theta_2$.

(b) By selecting 6 points for $\theta_2$ its nodes and weights are given in Table 1. Figure 6 presents the geometrical representation of the nodes in $\theta_1$-$\theta_2$ space.

(c) For the nodes $\theta_2^q$, q=1,..,6, the details are only given for the node $\theta_2^1=0.813899$. By setting $\theta_1^o$ at its lower bound, $\theta_1^o=0.728$, problem (11) yields:

$$\begin{aligned} \max \quad & 10\ z \\ \text{s.t.} \quad & a - z \ £\ 0.138864 \\ & a + 3z \ £\ 1.5583 \\ & \text{<}z - z \ £\ -4.814 \\ & a = 0_1 \end{aligned} \tag{16}$$

and hence its dual is given by:

$$\begin{aligned} \min \quad & -0.138864\ /i_i - 1.558\ p_{\%} + 4.814\ n_2'\ 0_y\ p \\ \text{s.t.} \quad & \wedge - 3//_2 * //_3\ £\ 10 \\ & -\mu_1 - \mu_2 + \mu_3 + \rho \geq 0 \end{aligned} \tag{17}$$

The solution of the above dual problem yields />=-10 and ^=10, $/i_2^9/i_3*0$, which means that constraint $f_1$ is the active one, thus constituting the optimal basis (see Figure 7). By doing range analysis, $A0_l^1$=1.748. Therefore 0^=0.728+1.748=2.476, and r / 0 ^ 3.31 + 10(0^0.728), for 0.728^0^2.476.

For 0^2.476, the solution of the dual provides the following result: />=10 and $/^{/}i^{s}/^{/}2^{S_{o'}}$ $t^{i}3$-^Q; therefore constraint $f_3$ is the active one (see Figure 7 ). By doing range analysis, $A0_1^2$=2.33. Since $0_1$** 2.476+2.33>$0_1^u$=3.272, then ^(0^=20.79-10 (0^2.476) for 2.476^0^3.272. Then the conditional expected revenue from equation (10) for this node is the following:

$$R_1(O = \int_{0.728}^{2.476} [3.31 + 10\wedge(0_l - O.728)]p(0_1)dd_1 + \int_{2.476}^{3.272} [20.79-10\wedge(0_1-2.476)p(0_l)dd_l \tag{18}$$

where $p(dj=\{2n<r)^{\prime v2}$ exp[-<0-/i)$^2$/ $2a^2$], jd=<r=2. The analytic integration of (18) yields a value of \$11.407x10$^3$/yr.

By applying the same procedure for all six nodes, the expected revenue for F° can be calculated from equation (14) at a value of \$6.5115x10$^3$/yr. For $F^1$ and $F^2$ the corresponding values are \$12.8x10$^3$/yr and \$30.0x10$^3$/yr respectively.

4. The revenue curve can be constructed using a polynomial approximation to fit the 3 points for the flexibility index (see Figure 8).

5. Given the two curves R(F) and C(F) the degree of flexibility that maximizes

Z=R(F)-C(F) is at $F^{\#}$=O.81 as shown in Figure 8. The corresponding optimal profit is of \$9.45x$10^3$/yr with design changes Ad^O, $Ad_2$=0.335.

The same example was then solved for case (b); i.e. a revenue function in terms only of *8,* r(0)=1O0$_y$-*2d*$_r$ Four and six nodes were considered for the integration respectively. In this case, as shown in Appendix A, there is no maximization problem over the control variable z. The results are summarized in Table 2, and the curve that was generated is shown in Figure 9. Note, that again the degree of flexibility that maximizes Z=R(F)-C(F) is at F*=O.81 with a profit of \$7.75x$10^3$/yr. It should also be pointed out that the approximation error due to the different number of nodes for the integration, for this example at least, was very small (less than 1%).

EXAMPLE 2

The reactor system considered in Halemane and Grossmann (1983) is shown in Figure 10. It consists of a reactor and a cooler, where a first- order exothermic reaction A+B takes place. The existing design of this flowsheet has a volume of the reactor V=4.6 $m^3$, and an area of the heat exchanger, A=12 $m^2$. Five uncertain parameters are considered: the feed flow rate $F_o$, the temperature of the feed stream $T_o$, the inlet temperature of cooling water $T_{wl}$, the reaction rate constant $k_o$, and the overall heat transfer coefficient for the heat exchanger U. Distribution functions are provided for the five parameters, as shown in Table 3, and the corresponding nominal values as well as the expected deviations for a confidence level of 85%.

The specification constraints as well as the heat, mass balances and design equations are presented in Table 4. The revenue function considered for this problem is also shown in this table and represents the net profit of the product sales minus the cost of the cooling utilities. Note that in this revenue function the feed flowrate $F_{of}$ which is an uncertain parameter, will have a dominant effect. Finally, data for the retrofit cost of additional reactor volume and exchanger area is also given. The problem is then to determine the degree of flexibility that maximizes the total profit, consisting of the difference between expected revenue and cost for the necessary

modifications.

The model equations were linearized at the point obtained from the solution of the feasibility test at the existing design for nominal values of the uncertain parameters ( see Halemane and Grossmann, 1983). The flexibility index of the existing design with V=4.6 $m^3$ and A=12 $m^2$ is $F^E$=0.146. Using the procedure described in Pistikopoulos and Grossmann (1987), the trade-off curve relating retrofit cost versus flexibility was generated, and is shown in Figure 11. This curve is a straight line, due to the fact that the only required modification is a reactor volume increase of 1.03 $m^3$ at F=1. In order to generate the curve for the expected revenue three points were considered for the flexibility $\{F^j\}=\{0.146, 0.60, 1.0\}$ with the corresponding design variables $\{d^j\}=\{(4.6,12.0), (5.14,12.0), (5.63,12.0)\}$.

Optimizing the existing design at the nominal parameter values, the sensitivity coefficients that were obtained for the uncertain parameters are given in Table 5. As can be seen the feedflowrate $F_Q$ *(8j)* has the largest sensitivity, followed by the reaction rate constant $k_o$ *(OX* The sensitivities of the other parameters can be neglected for practical purposes. Hence, *0* will be partitioned as follows:

$$\theta_m = \theta_1, \qquad \theta_D = \theta_4, \qquad \theta_S = \{\theta_2, \theta_3, \theta_5\}$$

Selecting four nodes for the parameter $0_A$. and applying the proposed procedure for evaluating the expected revenue at each value of $F^I$, yields the results shown in Table 6. By then generating the revenue curve, the degree of flexibility that maximizes the profit Z=R(F)-C(F) is determined at a value of $F^{\#}$=0.95, as shown in Figure 11. The corresponding optimal profit is \$7.4x$10^5$/yr with design changes in reactor volume AV=0.97 $m^3$ and no change in exchanger area AA=0.0 $m^2$. Thus, by increasing the reactor volume to 5.57 $m^3$ the profit of the system in Figure 10 can be increased from \$4.5x$10^3$/yr to \$7.4x$10^5$/yr due to the increased flexibility from the existing index $F^E$=0.146 to the optimal flexibility index $F^{\#}$=0.95.

## CONCLUSIONS

In this paper the problem of finding the optimal increase of flexibility that will maximize the total profit in an existing process flowsheet has been addressed. It has been shown that this problem can be greatly simplified by optimizing the expected revenue subject to having minimum retrofit cost. This simplification was shown to be valid for the case when the uncertain parameters have a dominant effect in the revenue function.

Given distribution functions for the uncertain parameters and a linear model for the performance constraints that need to hold for feasible operation, an efficient integration procedure for obtaining the expected revenue curve as a function of flexibility has been presented. The proper trade-off between investment cost for the retrofit and the expected revenue that will result from having an increased flexibility can then be established by constructing the composite curve of the total profit versus flexibility. Two example problems were presented to illustrate the fact that the proposed method provides a systematic approach to determine the optimal degree of flexibility in retrofit design.

## ACKNOWLEDGEMENT

The authors would like to acknowledge funding from the National Science Foundation under grant CPE-8351237.

## APPENDIX A. ON THE RELATION BETWEEN PROBLEMS (PO) AND (P)

It will be shown in this Appendix that problems (PO) and (P) are equivalent under the assumption that the revenue function *r{z,6)* is only a function of *6.* For this case (PO) can then be written:

$$\max_{y,Ad,F} Z = \underset{0ET(F)}{E} \{ r<0) \mid f(d,z,0)£O \} - {}^{*}_{r}(y,Ad)$$

$$\text{s.t.} \quad g(y,Ad,F) \; £ \; 0 \qquad \text{(AD}$$

$$d * d^{E} + Ad$$

where the maximization of the revenue with respect to z can be removed since r(z,0)=r(#). Furthermore, the inequalities f(d,z,#)^O are satisfied V 0€T(F) if and only if g(y,Ad,F)£0, $d=d^{E}+Ad$, are satisfied (see Pistikopoulos and Grossmann, 1987). Hence, the function

$$R(F) = \underset{\theta \in T(F)}{E} \{ r(0) \mid f(d,z,0)£O \} \qquad \text{(A2)}$$

will exist for $d=d^{E}+Ad$, Ad=arg[C(F)], and where

$$C(F) = \min_{y,Ad} {}_{r}f(y.Ad)$$

$$\text{s.t.} \quad g(y.Ad,F) <> 0 \qquad \text{(A3)}$$

corresponds to the maximization over y and Ad of the term -^(y,Ad) in (A1). From (A2) and (A3), (A1) reduces to:

$$\max_{r} \max_{y.Ad} Z = R(F) - {}^{*}_{r}(y,Ad)$$

$$\text{s.t.} \quad g(y,Ad,F) \leq 0$$

$$d = d^{E} + Ad$$

$$= \max_{F} Z * R(F) - \max_{y,Ad} \phi(y.\Delta d)$$

$$\text{s.t.} \quad g(y,Ad,F) \; ^\wedge \; 0$$

$$d = d^{E} + Ad$$

$$= \max_{F} Z = R(F) - C(F)$$

$$\text{s.t.} \quad C(F) = \min_{y,Ad} \; \hat{}(y,Ad) \qquad \text{(A4)}$$

$$\text{s.t.} \quad g(y,Ad,F) \leq 0$$

where R(F) is defined by (A2) for $d=d^E+Ad$, $Ad=\arg[C(F)]$.

It then follows from (A4) that problems (PO) and (P) are equivalent for the case when $r(z,0)=r(0)$.

## APPENDIX B. DERIVATION OF MODIFIED CARTESIAN INTEGRATION FORMULA

It will be shown in this Appendix how the Cartesian Integration formula in equation (4) can be derived based on the partitioning of the uncertain parameters *0.*

By partitioning *0* into three subsets $0=[0_m,\ 0_{Qt}\ 0_g]$ the expected revenue R(F) corresponds to:

$$R(F) = \underset{\theta \in T(F)}{E} \{ \max_z \ riz.d) \} - \hat{E}_T \{ \max_z \ r\{z.d_m.d_D,dJ \}$$

$$= \int_{e_m^L}^{0_m^u} \int_{e_D^L}^{0_D^u} \int_{e_S^L}^{e_S^u} \ imax_z \ riz.0_m \ .d.B_S Hp \ (6_m \ )d6 \prod_{m*i=1}^{D} p_{Di}(\theta_{Di})d\theta_{Di} \prod_{i=1}^{S} p_{Si}(\theta_{Si})d\theta_{Si}$$

We approximate the integral in $d_Q$ with a Gaussian quadrature, where L nodes are specified for each $0_{Dj}$. With this we then define a set of node points $\#_{D.i}^{q}$, as in equation (3). This permits us to use summation over the nodes in Q as follows:

$$\sum_{q \in Q} w_q [ \int_{\theta_m^L}^{0_m^u} \int_{0J}^{d_S^u} \ imax_z \ iiz.6_m \ .6_{S^1} \ \backslash 0^*)Ip_m \ (0_m \ )dd_{m*i} \ T\backslash pJd)dd_{Si} \ ]$$

where the constant term $M=2^{'D} \prod_{A A i=1}^{D} (0_i^u - 0_i^L)$ comes from the transformation of the limits of the integration from $[0.^L,0.^U]$ to [-1,+1], for which the Gaussian quadrature formula holds (see Carnahan *et a/,* 1969).

Since $dr/d\#_s$ is assumed to be zero, then $0_s$ can be fixed at its nominal point $\#_S^N$, and in this way the above multiple integral represents the conditional expected revenue $R_q(F)$ as given in equation (7). Substituting R(F) yields:

$$R(F) = M \sum_{qGQ} w_q \ R_q(F) \prod_{i=1}^{D} p_i(\theta_{Di}^{q})$$

which is exactly equation (4).

## REFERENCES


1. Bereanu, B., "Some numerical methods in stochastic linear programming under risk and uncertainty," *in Stochastic Programming, M.A.H. Dempster fed.), Academic Press,* 1980.

2. Cabano, L J., "Retrofit projects - The ultimate management challenge," *Chem. Eng. Pr.f* p. 27, April 1986.

3. Carnahan, B.r H. A. Luther and J. 0. Wilkes, *Applied Numerical Methods,* John Wiley & Sons, New York, 1969.

4. Grossmann, I. E., K. P. Halemane and R. E. Swaney, "Optimization strategies for flexible chemical processes," *Comp. Chem. Eng.,* Vol. 7, No. 4, p. 439, 1983.

5. Halemane, K. P. and I. E. Grossmann, "Optimal Process Design under uncertainty," *A.I.Ch.E. J.,* Vol. 29, p. 425, 1983.

6. Johns, W. R., G. Marketos and D. W. T. Rippin, "The optimal design of chemical plant to meet time-ranging demands in the presence of technical and commercial uncertainty," *Trans. I. Chem. E.,* Vol. 56, p. 249, 1978.

7. Lashmet, P. K. and S. Z. Szczepanski, "Efficiency, uncertainty and distillation column overdesign factors," *Ind. Eng. Chem. fProc. Des. DevJ,* Vol. 13, p. 103, 1974.

8. Linnhoff, B. and R. Smith, "Design of flexible plant- How much capital for how much Flexibility," *A.I.Ch.E. Spring Meeting, Houston, Texas,* 1985.

9. Malik, R. K. and R. R. Hughes, "Optimal design of flexible chemical processes," *Comp. Chem. Eng.,* Vol. 3, p. 473, 1979.

10. Pai, C. D. and R. R. Hughes, "Adaptations of the Han-Powell algorithm for process design under uncertainty," *presented at A./.Ch.E. meeting, Chicago, Illinois,* November 1985.

11. Pistikopoulos, E. N. and I. E. Grossmann, "Optimal retrofit design for improving process flexibility in linear systems," *accepted for publication in Comp. Chem. Eng.,* 1987.

12. Reinhart, H. J. and D. W. T. Rippin, "The design of flexible batch chemical plants," *AI.Ch.E. Spring Meeting, Houston, Texas,* 1985.

13. Schrage, L, *Linear, Integer and Quadratic Programming with LIN DO,* Scientific Press, Pallo Alto, CA, 1986.

14. Swaney, R. E. and I. E. Grossmann, "An index for operational flexibility in chemical process design. Part I : Formulation and theory.I' *AI.Ch.E. J.,* Vol. 31, p. 621, 1985.

15. Weisman, J. and A. G. Holzman, "Optimal process system design under conditions of risk," *Ind. Eng. Chem. fProc. Des. Dev.),* Vol. 11, p. 386, 1972.

Table 1: Example 1a: Nodes and weights of Gaussian formula

| Node number | Node | Weight |
|---|---|---|
| q | $\theta_2^q$ | $w_q$ |
| 1 | 0.813899 | 0.171324 |
| 2 | 1.158942 | 0.360761 |
| 3 | 1.890078 | 0.467913 |
| 4 | 2.109921 | 0.467913 |
| 5 | 2.841057 | 0.360761 |
| 6 | 3.186100 | 0.171324 |

Table 2: Example 1b: Expected revenue for 4 and 6 nodes formulae

| Flexibility index | No. of nodes 4 | 6 | Error |
|---|---|---|---|
| | Profit | | |
| | $\$10^3$/yr | $\$10^3$/yr | % |
| 0.63 | 7.246 | 7.282 | 0.5 |
| 0.81 | 11.090 | 11.044 | 0.4 |
| 1.00 | 15.144 | 15.144 | 0.0 |

**Table 3: Data for uncertain parameters for example 2**

| Uncertain Parameter | Distribution Function | Nominal Value | Positive Deviation | Negative Deviation |
|---|---|---|---|---|
| $\theta$ | | $\theta^N$ | $\Delta\theta^+$ | $\Delta\theta^-$ |
| $F_o$ (krnoles/hr) | N(45.36,5) | 45.36 | 7.5 | **7.5** |
| $T_o$ (K) | N(333,4.5) | 333.0 | 6.66 | 6.66 |
| $T_{w1}$ (K) | N(300,6) | 300.0 | 9.0 | 9.0 |
| $k_0$ ($hr^{-1}$) | N(12,0.8) | 12.0 | 1.2 | 1.2 |
| **U ($KJ/m^2hrK$)** | N(1635,110) | 1635.0 | 163.5 | 163.5 |

**Table 4:**

**Model equations, specification inequalities and economic data for example 2**

Retrofit cost: $10\ \Delta V + 5\ \Delta A$ ($\$10^4$/yr)

Revenue function: $r = 100\ F_o - 2\ F_w$ ($\$10^3$/yr)

| Model equations | Specification inequalities |
|---|---|
| $F_o(c_{Ao}-c_{A1})/c_{Ao}=Vk_o\exp[-E/RT]c_{A1}$ | $V^d \geq V$ |
| $(-\Delta H)F_o(c_{Ao}-c_{A1})/c_{Ao}=F_o c_p(T_1-T_o)+Q_{HE}$ | $(c_{Ao}-c_{A1})/c_{Ao} \geq 0.90$ |
| $Q_{HE}=F_1 c_p(T_1-T_2)$ | $311 \leq T_1 \leq 389$ |
| $Q_{HE}=F_w c_{pw}(T_{w2}-T_{w1})$ | $T_1-T_2 \geq 0$ |
| $Q_{HE}=AU\Delta T_{ln}$ | $T_{w2}-T_{w1} \geq 0$ |
| $\Delta T_{ln}=f(T_1,T_2,T_{w1},T_{w2})$ | $T_1-T_{w2} \geq 11.1$ |
| | $T_2-T_{w1} \geq 11.1$ |

**Table 5: Sensitivity coefficients of the uncertain parameters for example 2**

| | Uncertain parameter | Sensitivity coefficient |
|---|---|---|
| $i$ | $\theta_i$ | $\tau_i$ |
| 1 | $F_o$ | 1628.16 |
| 2 | $T_o$ | 53.08 |
| 3 | $T$ , | 61.15 |
| 4 | $k_o$ | 901.98 |
| 5 | $U$ | 0.00 |

**Table 6: Expected revenues for the three points of example 2**

| Flexibility index | Design variable | | Revenue function |
|---|---|---|---|
| $F^1$ | $d'$ | | $R(F')$ |
| | $V(m^3)$ | $A(m^2)$ | $\$10^4$/yr |
| 0.146 | 4.6 | 12.0 | 0.45 |
| 0.60 | 5.14 | 12.0 | 68.2 |
| 1.00 | 5.63 | 12.0 | 146.4 |

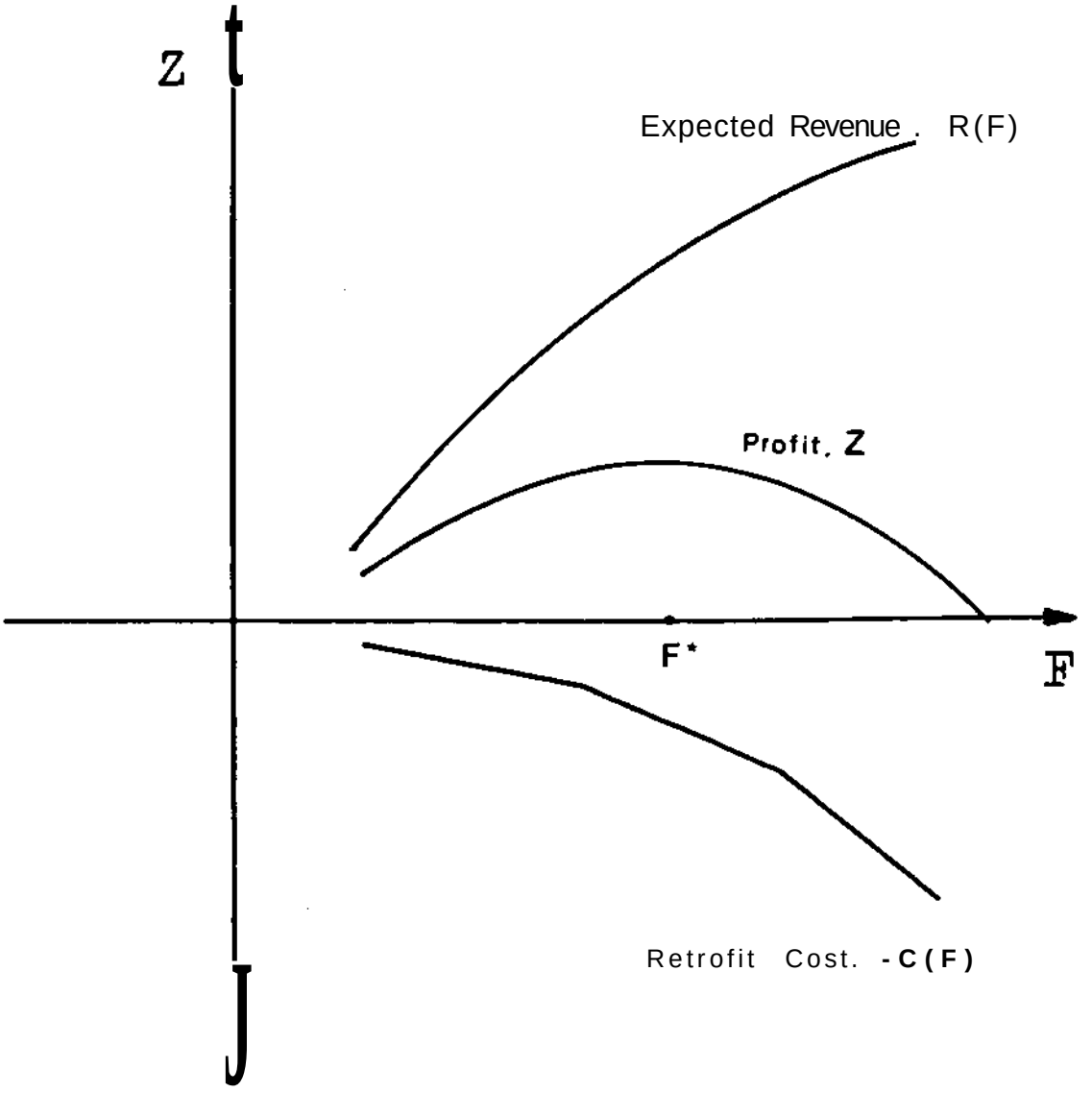


**Figure 1: Curve of total profit versus flexibility**

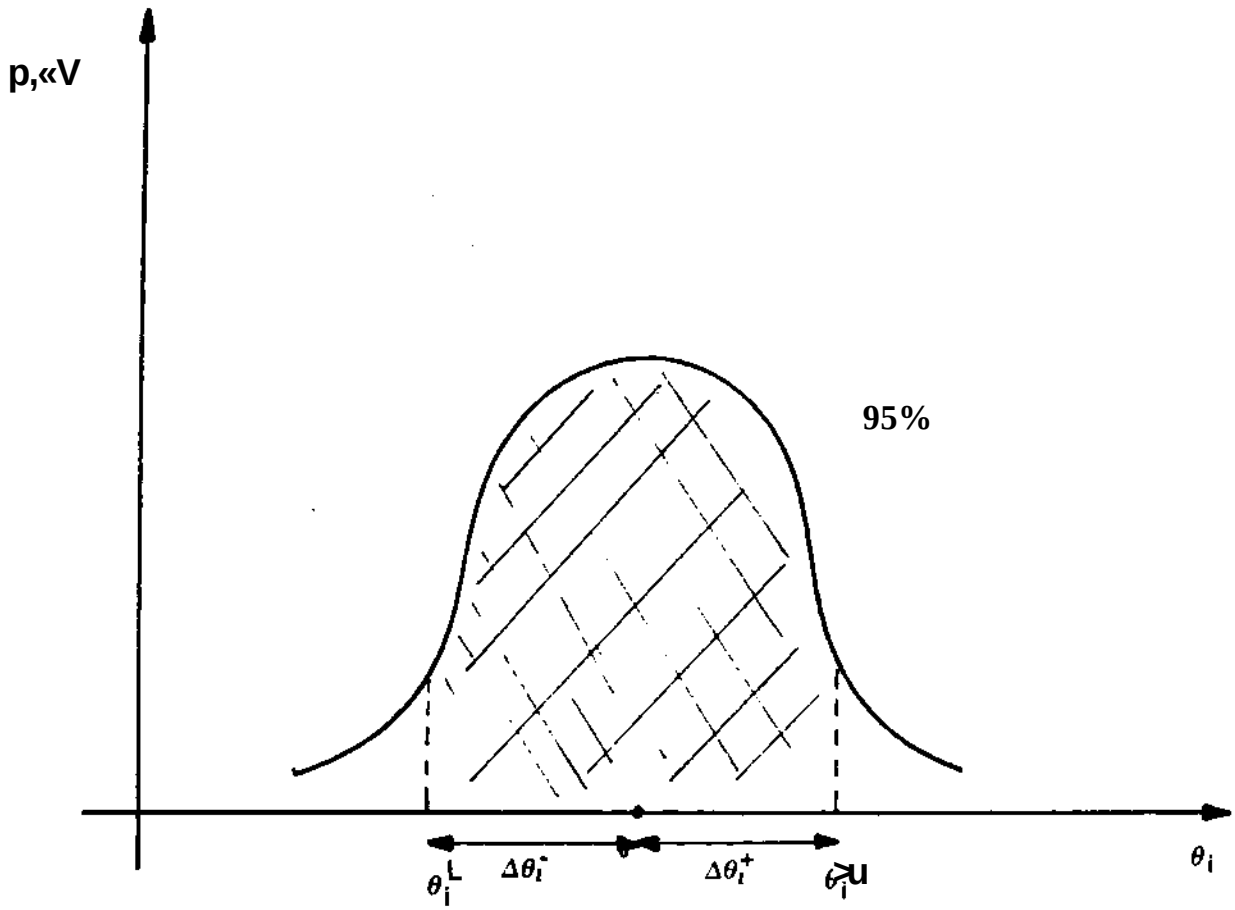


**Figure 2: Relation between level of confidence and expected deviation**

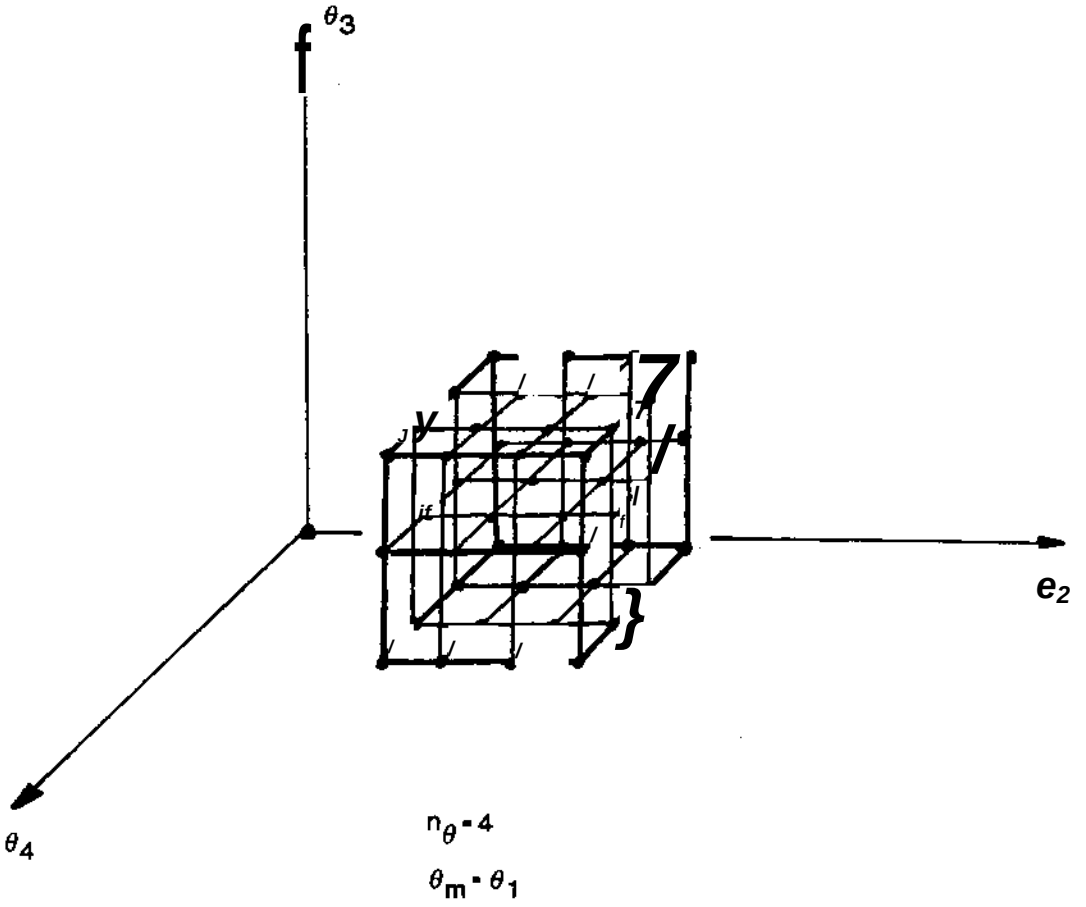


**Figure 3: Nodes for the Cartesian Integration Method**

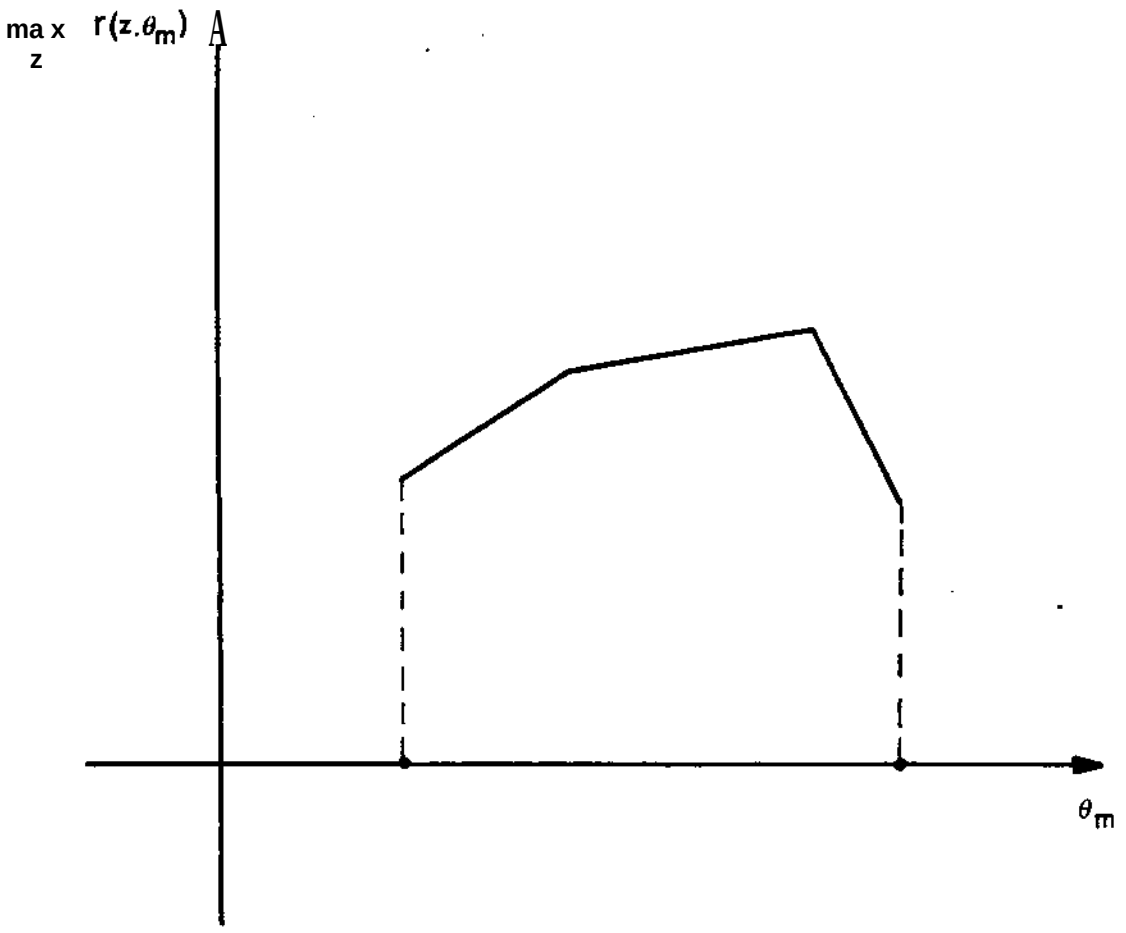


**Figure 4: Piecewise linear revenue function**

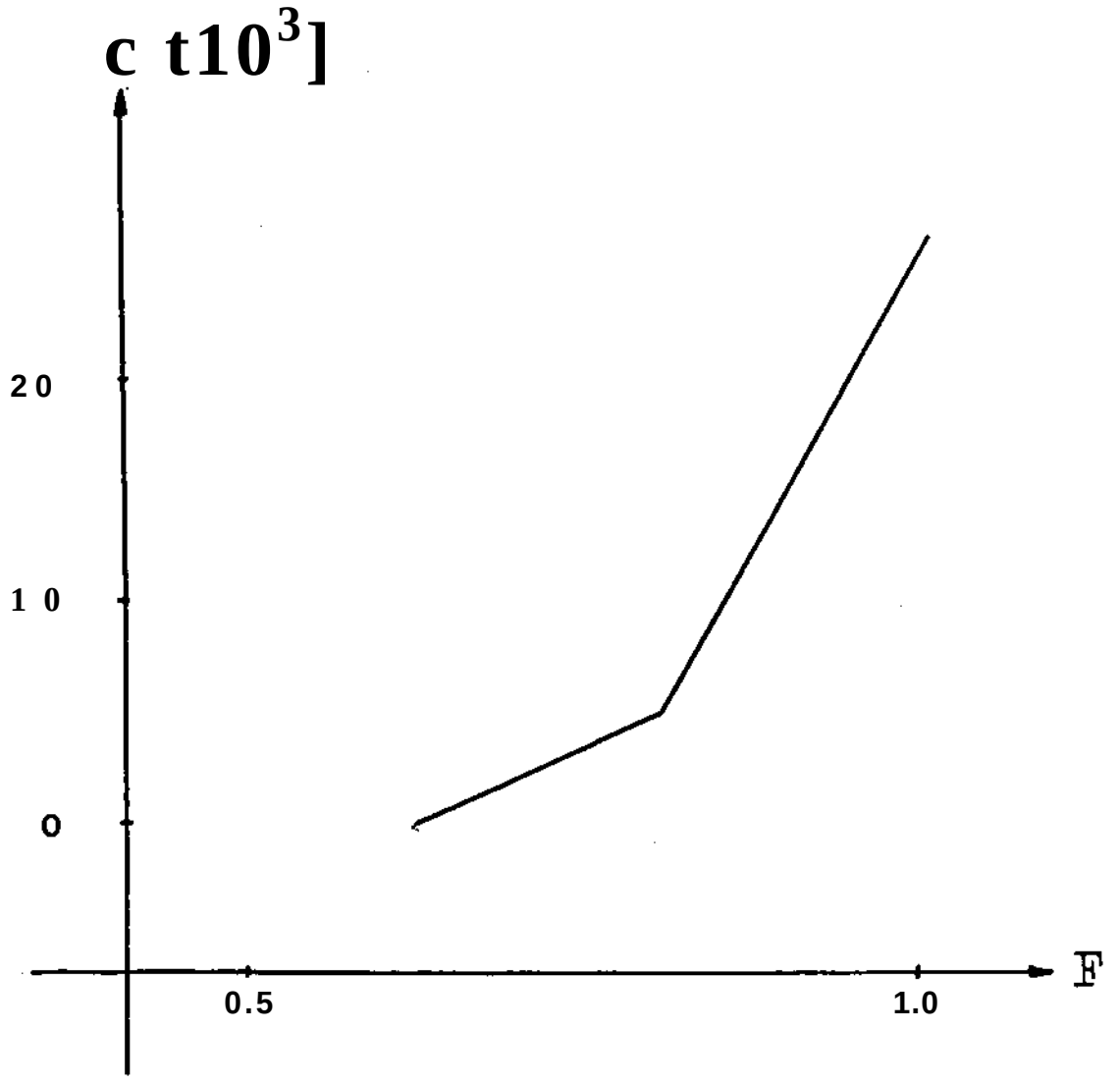


Figure 5: Curve of cost vs. flexibility for example 1

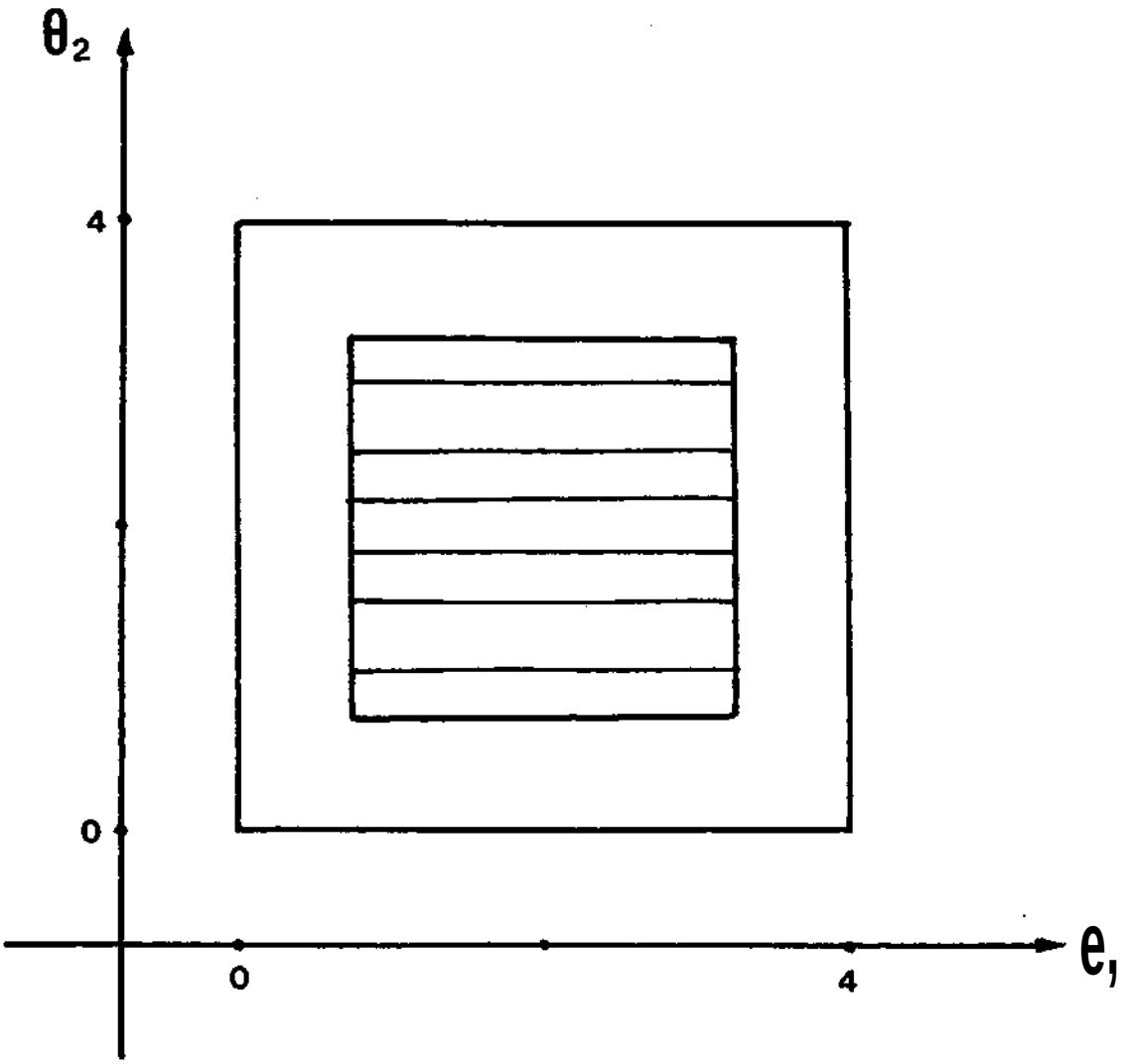


Figure 6: Geometric representation of the nodes for example 1

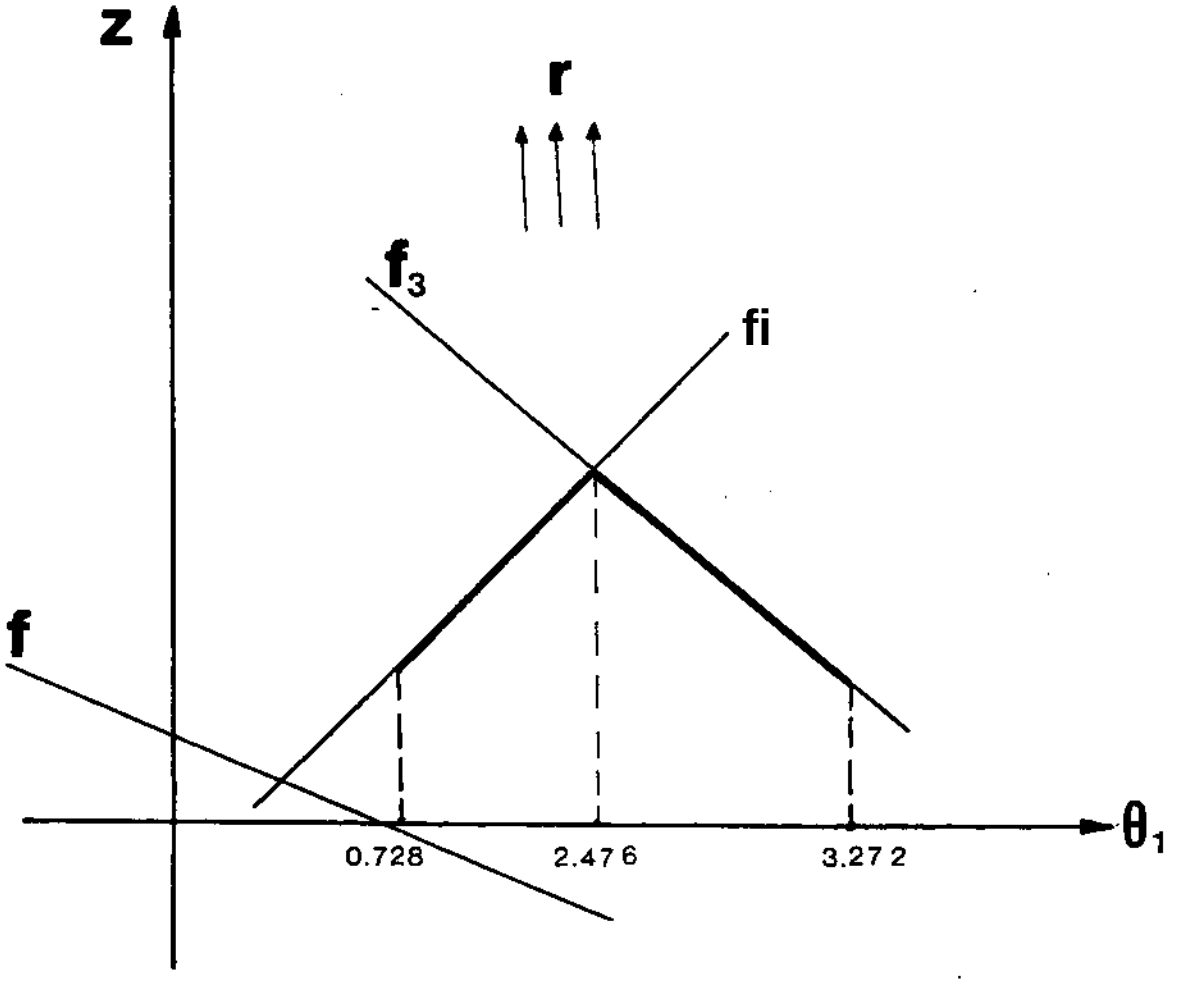


**Figure 7: Geometric representation of the optimal bases of the revenue function for example 1a**

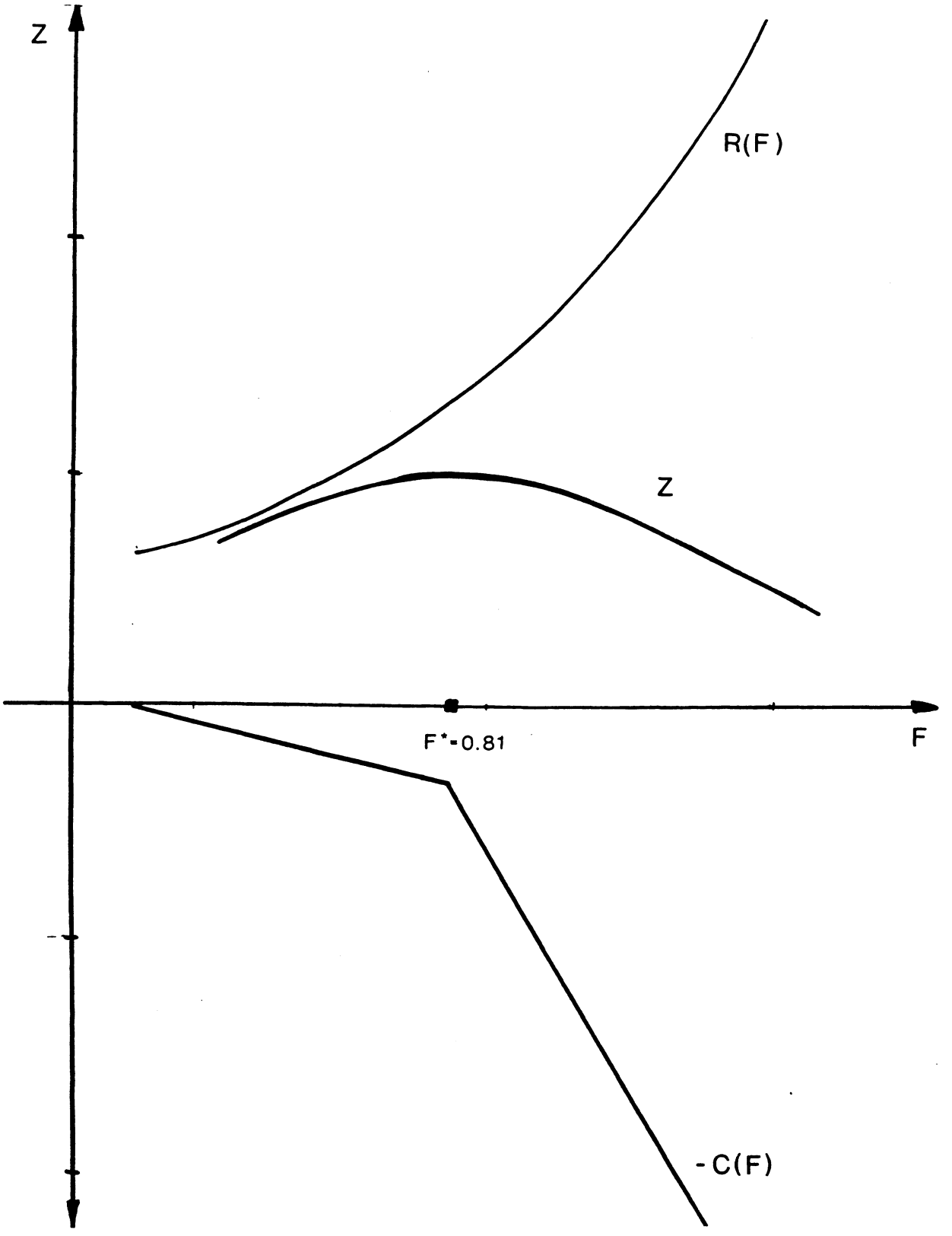


**Figure 8: Revenue curve vs. flexibility and optimal degree of flexibility for example 1a**

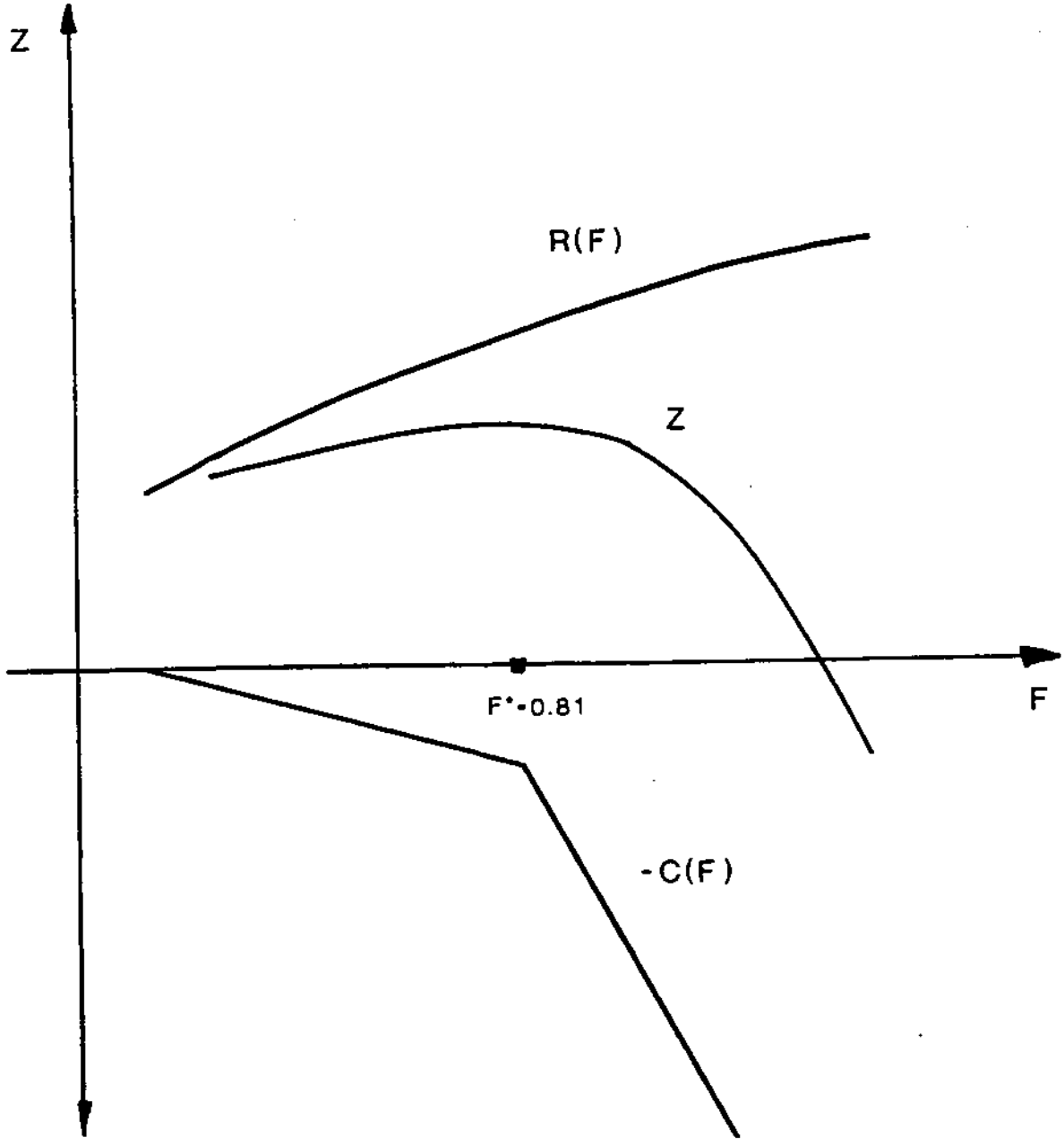


**Figure 9: Revenue curve vs. flexibility and optimal degree of fiexibilty for example 1b**

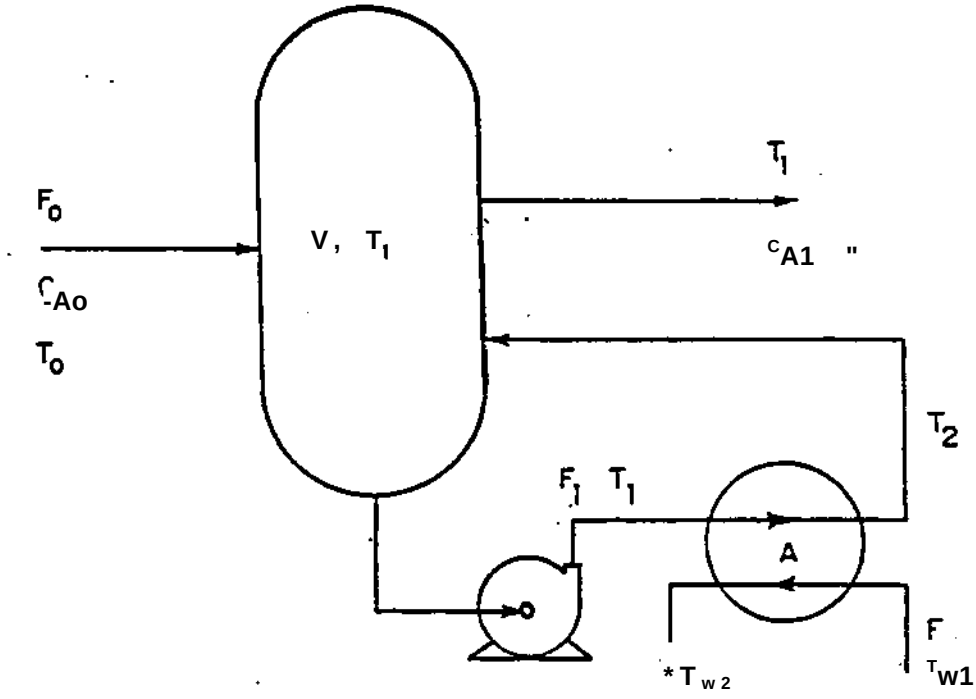


**Figure 10: Reactor system of example 2**

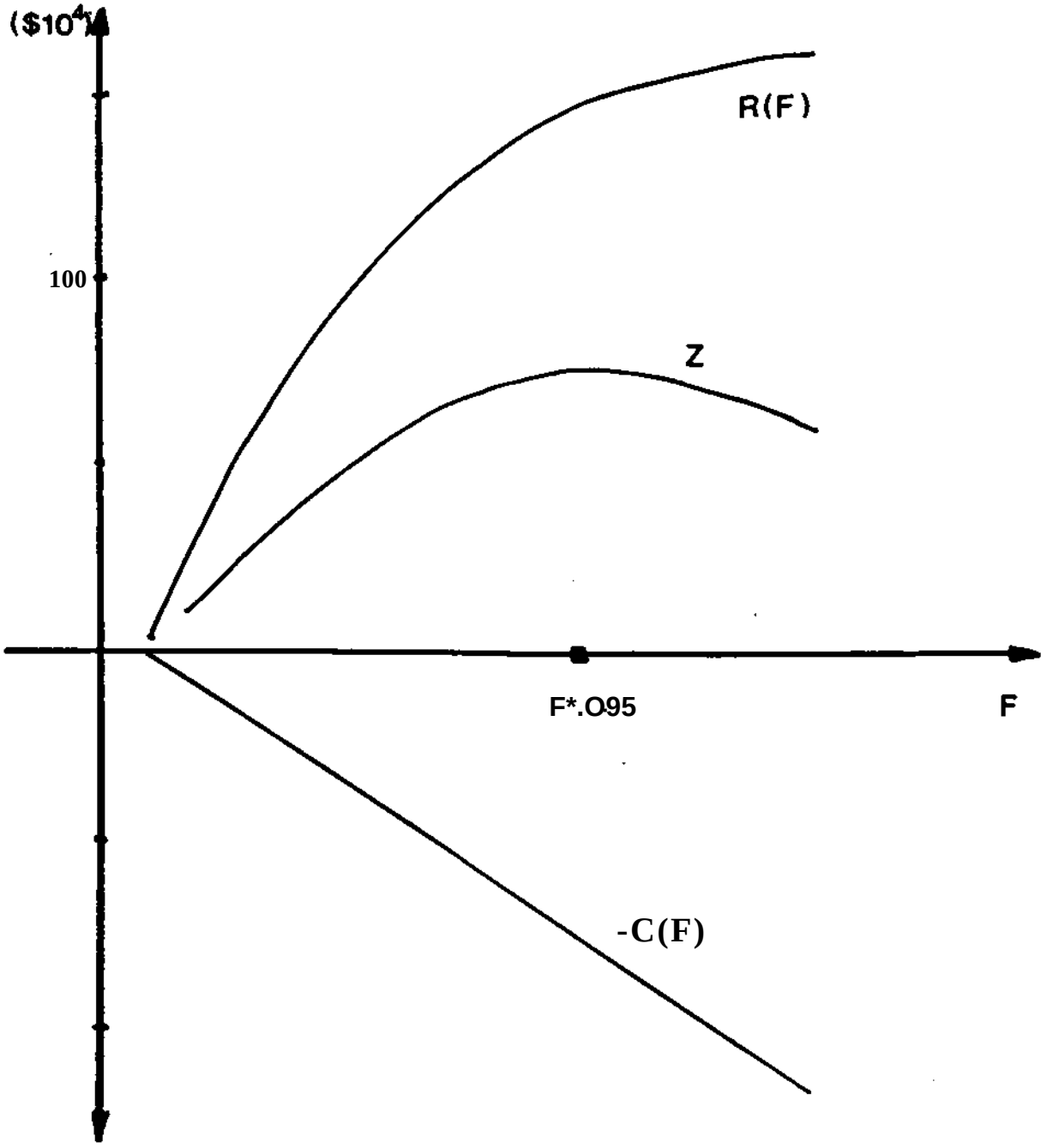


Figure 11: Curve of cost vs. flexibility and optimal degree of flexibility for example 2