Carnegie Mellon University
Research Showcase @ CMU

Department of Chemical Engineering | Carnegie Institute of Technology

1986

An algorithmic procedure for the synthesis of distillation sequences with bypass

Richard R. Wehe
Carnegie Mellon University

Arthur W. Westerberg

Carnegie Mellon University.Engineering Design Research Center.

Follow this and additional works at: http://repository.cmu.edu/cheme

Published In

.

This Technical Report is brought to you for free and open access by the Carnegie Institute of Technology at Research Showcase @ CMU. It has been accepted for inclusion in Department of Chemical Engineering by an authorized administrator of Research Showcase @ CMU. For more information, please contact research-showcase@andrew.cmu.edu.

NOTICE WARNING CONCERNING COPYRIGHT RESTRICTIONS:
The copyright law of the United States (title 17, U.S. Code) governs the making of photocopies or other reproductions of copyrighted material. Any copying of this document without permission of its author may be prohibited by law.

An Algorithmic Procedure for the Synthesis of Distillation Sequences with Bypass

by

R. R. Wehe, A. W. Westerberg

EDRC-06-23-87

An Algorithmic Procedure for the Synthesis of Distillation Sequences with Bypass

Richard R. Wehe
and
Arthur W. Westerberg

Department of Chemical Engineering and
Engineering Design Research Center
Carnegie-Mellon University
Pittsburgh, Pa. 15213

A paper contributed to the memorial issue for Richard R. Hughes,
Computers and Chemical Engineering Journal

November 1986

Univtrssty U^ranss
Carnegie Mellon University
Pittsburgh, Pennsylvania 15213

Dedication

Richard Hughes, with John Hendry, published one of the earlier papers on the synthesis of separation systems way back in 1972. It is fitting that we have the opportunity to present a paper that continues this earlier work of his. Dick was a good friend.

Arthur W. Westerberg

Abstract

When a separation system is to produce multicomponent products, it is frequently not necessary to separate a feed mixture completely into pure components. Instead, column bypasses can reduce both capital and operating costs by reducing mass load on the columns.

This paper presents an algorithmic procedure for the synthesis of a sequence of simple, sharp split distillation columns with both bypasses and mixers that minimizes annualized costs. This procedure can solve problems in which a single feed is to be separated into two or more multicomponent products. We use models that are linear except for stream splitters. Unfortunately, superstructures developed from these models and simply optimized can display multiple local optima; a better approach is needed. We present an analysis of the problem structure that suggests a decomposition which allows significant reductions both in the problem search space and nonlinearities caused by the splitters. The decomposition permits one to solve any three component problem for its global optimum as two linear programs. Four and five component problems require six and twenty-four nonlinear programs, respectively, each of which models a structurally different flowsheet for the process. For each flowsheet, one can establish a lower bound for the corresponding nonlinear program by using a relaxation that allows the splitters to be treated *linearly*, giving a linear program which is readily solved.

For two example problems, we first produced lower bounds for each structural alternative (a linear program for each). Solving the nonlinear program for the most promising structure eliminated the need for solving the nonlinear program for all remaining alternatives. Upper and lower bounds within 1% of each other strongly imply the solutions were globally optimal.

Scope

Distillation has long been the separation technique of choice in industry and typically accounts for a significant fraction of the cost of a chemical process. Most of the research into distillation sequence synthesis has centered on the design of column sequences to separate a feed mixture into pure components. Many times, however, the desired products contain more than a single component At these times, the use of column bypasses can result in a significant savings, both in capital and operating costs.

Figure 1 shows two sequences, each of which separates the feed mixture into two multicomponent products. Sequence la separates the feed into pure components and then remixes as necessary to produce the desired products. Sequence lb separates only a fraction of the feed into pure components and mixes these with column bypass streams to produce the desired products. In this example, the costs of the sequences differ by approximately a factor of three.

One can develop for this problem a "superstructure" in which is embedded all alternative solutions and solve as a nonlinear program. Due to nonconvexities in the problem, however, one cannot guarantee global optimality of the resulting solution. Figure 2 describes a problem, the separation of a four component mixture into two four component products, with at least three local optima, ranging in cost from 14.73 to 1S.S7.

Previous workers have proposed several procedures for solving problems of this class. Each of these procedures has its strengths, but none are capable of guaranteeing it will solve this problem for its global optimum.

BALTAZAR, a general process synthesis program developed my Mahalec and Motard, uses a stream matching algorithm to generate a flowsheet for the multiple feed, multiple product problem. Mahalec and Motard also describe an evolutionary procedure to perform a structural optimization of the flowsheet This approach has the advantage that it allows for an arbitrary costing function, multieffect columns, and column bypasses. Due to the nature of the solution procedure, however, the global optimality of the resulting solution cannot be guaranteed [2,3].

Lu describes a procedure in which he uses a stream lumping and matching algorithm to synthesize a separation system for the multiple feed, multiple product problem. He also describes an evolutionary procedure to perform a structural optimization of the flowsheet. This approach, like that of Mahalec and Motard, has the advantage that it allows for an arbitrary costing function, multieffect columns, and column bypasses. The global optimality of the resulting solution cannot be guaranteed [1].

Muraki and Hayakawa describe an evolutionary procedure for the synthesis of sharp split distillation sequences with bypass. They address the single feed, two product problem. Their procedure is based on manipulation of a material allocation diagram (MAD) to determine the optimal flow pattern for a given column sequence [5]. Their procedure

has the advantage that it allows for an arbitrary costing function. However, due to the nature of the solution procedure, they cannot guarantee global optimality of the resulting flowsheet [4].

Significance and Conclusions

The multicomponent product problem requires that nonsharp splits and column bypasses be considered to reduce separation system cost. This work considers the addition of bypass to sequences of sharp split distillation sequences.

The algorithm presented here can solve three, four, and five component problems to global optimality. The partitioning of the problem and subsequent analysis of each flowsheet reveal a high degree of linearity in the resulting subproblems.

Assumptions

There are several assumptions implicit in the algorithm presented here. They are:

1. The material flow through the distillation columns is unidirectional. If material flows from one column to a second, no material may flow from the second back to the first.
2. All distillation columns perform simple, sharp splits. Each column separates a mixture into two products, and no component is contained in both products.
3. There is no multieffecting of distillation columns. No two columns perform the same separation.
4. Heat integration is not considered.
5. The cost of a distillation column can be modeled satisfactorily using a fixed charge model based on the material flow through the column.
6. There is a single feed to the separation system.

These assumptions permit some radical simplifications of the problem superstructure. In particular, the assumption of unidirectional flow permits the decomposition of the problem into a number of subproblems, one for each permutation of the columns. One can calculate the fixed cost of each permutation directly because the columns present have already been determined. The remainder of the cost function is linear.

Modeling of splitters

The primary difficulty in formulating this problem as a mathematical program is the modeling of the splitters. In the absence of information about the composition of the splitter feed or the values of the splits, splitters are inherently bilinear. The bilinearity of the splitters introduces nonconvexities into the model of the problem and opens the possibility of local optima. In most of the splitters in any given flowsheet, some information is present about either the composition of the splitter feed or the splits going to the various products.

We discuss the modeling of the splitters in more detail below, using one of the twenty-four possible sequences for a

five-component example problem. The five components are labeled, in order of decreasing relative volatility, A, B, C, D, and E. The flowsheet has four columns, to be labeled 1 to 4 increasing in the direction of the material flow. The four products are given labels 5, 6, 7, and 8. Table 1 shows the component flowrates of the feed and required product compositions. Figure 3 shows the flowsheet for this example problem. For the sake of clarity, Figure 3 omits all final stream splitters. The feed is split and enters the diagram via streams 1-5. The streams leaving the diagram, streams 6-14, enter splitters, from which they flow to any of the products, as required.

We identify different sequences by the light key. For example, sequence ABCD is the direct sequence and sequence DCBA is the indirect sequence. Using this nomenclature, the sequence in Figure 3 is sequence CDAB.

Splitters where composition is known

At certain points in the flowsheet, the stream entering a splitter has a partially or completely known composition. For example, the top product of column one, the CD split, contains components A, B, and C, in the same relative amounts as the feed to the sequence. In that the composition of the inlet stream is known, a simple material balance and constraints to maintain the relative flowrates of components A, B, and C are sufficient to model the splitter. The model for this splitter is:

$$t_{1,k} - \sum_{j=3}^{8} t_{1,j,k} = 0 \qquad k = A,B,C \qquad (1)$$

$$f_{k+1}\, t_{1,j,k} \text{ "A } < i_{jM} i \text{ } = 0 \qquad J = 3.\neg 8 \qquad k = Afl \qquad (2)$$

Equation (1) is the material balance about the splitter for component k. Equations (2) specifies the relative amounts of components k and k+1 in the stream to destination j. The general form of the equations is shown above. For this problem, no B, and hence no ABC mixture flows to product 8. Thus, the equations could be rewritten for j from 3 to 7. The formulation is linear. Thus this splitter is in fact linear in the model.

Splitters where split fraction is known

Based on an analysis of the feed and product specifications, one can determine the flow of the key components through the last column in each sequence. Furthermore, one can determine the actual split fractions of the streams leaving the last column in the sequence, as we shall now prove.

By assumption, the marginal cost of passing material through a distillation column is positive. Consequently, the passing of material through a distillation column only to remix it is clearly nonoptimal - a bypass of this column would result in a lower cost. Therefore, in any optimal solution, material from either the top product or the bottom product of a distillation column may flow to a given destination, but not both.

For the purpose of discussion, assume that the last column in the sequence separates components B and C (see Figure 3). The streams leaving the separation system are as follows: the top product of the last column which contains B and no C, the bottoms product of the last column which contains C and no B, and all other streams leaving the system which contain either no B and C or contain B and C in the same ratio as the feed. By a simple material balance, any product with a greater B to C ratio than the feed receives some flow from the top product of the last column. Similarly, any product with a lower B to C ratio than the feed receives flow from the bottoms of the last column. In that no product may receive flow from both the top and the bottom products of a column, any product that contains B and C in the same ratio as the feed receives no flow from the last column.

In addition to determining which stream flows to each product, the material balance can determine the amount of B or C required by each product from the last column. The B and C requirements of each product may be decomposed into some amount of B and C in the same relative amount as the feed, plus some excess amount of B or C. Normalizing the excess B requirements of each product by the total B requirements for all products yields the split fractions for the splitter at the top of the last column. A similar analysis with respect to excess C requirements determines the split fractions at the bottom of the last column. Table 2 shows the calculation of the split fractions for the top and bottom products of the fourth column in the sample problem.

Note that if every product contains the key components of the last column in the same ratio as the feed, no material flows through this column. Therefore, the column may be deleted from the superstructure and its fixed charge subtracted from the objective function. If there are two or more pairs of components that everywhere appear in the same ratio as in the feed, several of the column permutations degenerate into the same flowsheet.

The above analysis provides a linear model for every splitter present in a three component problem. We formulate and solve linear programs for each of the two possible sequences. The globally optimal solution to this problem is the less expensive of the two sequences.

Bounding of flowsheets

The above analysis is not sufficient to remove all nonlinearities from the four and five component problems. In each of the six possible flowsheets for the four component problem one bilinear splitter remains. In each of the twenty-four possible flowsheets for the five component problem, either two or three bilinear splitters remain, depending on the flowsheet. For the flowsheet in Figure 3, only the splitters for streams 7 and 11 remain bilinear. These splitters introduce nonconvexity into the problem and prevent a rigorous guarantee of global optimality.

Bounding from above and below can eliminate some of the potential flowsheets from consideration. An upper bound

for a sequence is any feasible solution. In particular, a possibly local minimum to the nonlinear programming problem is an upper bound on the global minimum of the nonlinear programming problem. One can calculate a lower bound by finding a global minimum to any relaxation of the nonlinear programming problem. Any sequence with a lower bound greater than the least upper bound so far discovered may be discarded. If the upper and lower bounds for a sequence are sufficiently close together, one can infer that the upper bound is as close to the global optimum as desired - it is probably the global optimum, but, if not, one is not concerned

To determine a lower bound, we relax the nonlinear program *to a linear program* by relaxing all constraints with nonlinear terms. The only affected unit operations are the bilinear splitters. One can then solve the resulting linear program to a global mimimum using standard codes. The constraints to model the splitter at the bottom of the AB column in Figure 3 are as follows:

$$X^{8}_{y=4}\ 3jJk = \wedge \qquad k = B£J>JE \qquad (3)$$

$$b_{3,j,k+1}\, b_{3,k} - b_{3,j,k}\, b_{3,k+1} = 0 \qquad j = 4,\cdots,8 \qquad k = B,C,D \qquad (4)$$

The nonlinear program contains constraints 3 and 4. In the linear relaxation, only constraints 3 are included.

For the example problems, this relaxation does not provide a sufficiently good lower bound to be useful in eliminating potential column sequences. To improve the quality of the lower bound, it is necessary to add some constraints that are redundant in the nonlinear programming formulation of the problem.

In the same manner that the flows through the last column were calculated above, a lower bound may be calculated on the flow of the key components through each column. These constraints are:

$$t_{i,k(i)} \geq t_{i,k(i),min} \qquad {}^{/=1}>2 \qquad (5)$$

For example, in the flowsheet of Figure 3, the first column separates components C and D. Table 3 shows the calculation that would be done if the CD column were the last column in the separation sequence. The result of this calculation is a flow of components C and D through the column. As this is not the last in the sequence, this flow constitutes a lower bound on the amount of C and D that must actually pass through the column because at least this much separation of components C and D must be performed. If more C and D pass through, the mass load on subsequent columns may be reduced, at the expense of increasing the mass load on this column. The constraint we would write is:

$$hjc\ *\ {}^{4}\text{-}{}^{2} \qquad (6)$$

It is not necessary to include a similar constraint for the heavy key because the flows of the light and heavy keys into

the column are proportional (see last column in Table 3).

Only constraints for columns one and two need to be written here. This is because only the key components from these columns pass through a bilinear splitter after they have passed through the respective column. In Figure 3, components C and D, the key components of column 1, pass through the splitters at the top of the DE column and the bottom of the AB column. Both of these splitters are bilinear. A physical interpretation of this relaxation is that the bilinear splitters are now component separators. These separators are capable of separating the key components of preceding columns only because the flowrates of all other components are known to be proportional in the ratio of the feed flowrate. The cost of performing this separation is the cost of passing the material through the column preceding each splitter. These constraints are thus useful only if both key components of the column pass through the same bilinear splitter after having passed through the column. Neither the key components of column three nor those of column four will both pass through the same bilinear splitter on their way to the final products.

Similarly, one can establish bounds on the flowrates of components relative to each other. For the purposes of discussion, again consider the flowsheet shown in Figure 3, where the first and second columns in a sequence separate components CD and DE, respectively. The feed to the second column consists of a mixture of DE and ABCDE, where the component flowrates are proportional to the feed flowrate. A, B, and C will be in the same ratio as the feed in the top product of the second column; D can only be enriched. An upper bound on the amount of A, B, or C in the top product of the second column can be related to the amount of D in the top product of the second column. Since passing a stream through a splitter does not change its composition, one can apply this constraint to each stream leaving the splitter at the top product of the second column and thereby tighten of the lower bound. These constraints need be written for only A, B, or C - not all three. For component C they are:

$$fo\ hie\ \sim fc\ t_{2,j,D} \leq 0 \qquad j = 3,\cdots,8 \qquad (7)$$

which are linear in $t_{2,j,c}$ and $t_{2}jp^{*}$ since $/_{c}$ and $/_{D}$ are known.

One can write similar constraints for components D and E at the bottom of the third column. Note that one cannot write constraints of this form for any one of components A, B, or C and D at the bottom of the third column. The feed to the third column consists of a mixture of ABC, ABCD, and ABCDE. The ABC mixture is rich in A, B, and C relative to D. The ABCD mixture, the top product of the second column, is poor in A, B, and C relative to D. Because one of the feeds is rich in A, B, and C relative to D and another is poor in A, B, and C relative to D, it is not possible to bound the flows of the components relative to each other.

One can improve this lower bound further by observing that the C to D ratio at the bottom of the third column must be either greater than or less than that of the feed. The problem may then be reformulated as a mixed-integer linear program, by writing the relative flow constraints using components C and D as follows:

Material balances for C and D:

$$b_{3,j,C} - b_{3,j,C,1} - b_{3,j,C,2} = 0 \qquad j = 4,\cdots,8 \qquad (8)$$

$$b_{3,j,D} - b_{3,j,D,1} - *3jA2 * \circ \qquad J = {}^{4,\cdots},8 \qquad (9)$$

Set appropriate flows to zero based on binary integer decisions y_{ℓ} and y_2:

$$b_{3,j,C,1} + b_{3,j,D,1} - (f_C + f_D)\, y_1 \le 0 \qquad j = 4,\cdots,8 \qquad (10)$$

$$b_{3,j,C,2} + b_{3,j,D,2} - (f_C + f_D)\, y_2 \le 0 \qquad j = 4,\cdots,8 \qquad (11)$$

When y_t = 1, forces ratio C to D greater than feed ratio:

$$fohjjc.\backslash \ \sim fc*3;AI \ \geq \circ \qquad j = 4,\cdots,8 \qquad (12)$$

When y_2 = 1, forces ratio C to D less than feed ratio:

$$fo \ {}^{b}3J.Cl \ \sim fc \ {}^{b}3j{:}D,2 \le 0 \qquad j = 4,\cdots,8 \qquad (13)$$

Either $y_x 0 T y_2 is$ one; the other is zero:

$$y_1 + y_2 = 1 \qquad (14)$$

$$y_1, y_2 \in [0,1]$$

At times, the bounding may not be sufficient to guarantee global optimally of a solution. When this is the case, the range of possible compositions in the bilinear splitter may be partitioned. This partitioning results in a relaxation of the nonlinear program to a mixed-integer linear program. This mixed-integer linear program may be solved to global optimality using standard techniques. At the top of column 2 in Figure 3, the relative amounts of components A, B, and C are known to be present in the same ratio as the feed. Furthermore, the flowrates of components A, B, and C are bounded relative to the flowrate of component D through this splitter. The different partitions specify different possible relative amounts of components A, B, or C and D. Once an interval is established on the relative amounts of the different components, the splitter may be modeled linearly. Integer variables are used to select one of many possible partitions. The constraints restricting the relative amounts of components C and D in the splitter at the top ofcolumn2are:

Material balances for C and D:

$$^{b}UC- \; Z^{M} \; hjjcj* = \circ \qquad J = {}^{3}*'''>* \qquad (^{15})$$

$$b_{3,j,D} - \sum_{m=1}^{m=l} b_{3,j,D,m} = 0 \qquad ; = 3;-,8 \qquad (16)$$

Set appropriate flows to zero based on binary integer decisions y_m:

$$b_{3,j,C,m} + b_{3,j,D,m} - (f_C + f_D)\, y_m \le 0 \qquad ; = 3;-,8 \qquad m = \backslash rM \qquad (17)$$

When $>_m$ s 1, forces ratio C to D to be in a given partition:

$$f_D^{b}\, {}_{3,j,C,m} - \frac{m-1}{M} f\, h\, {}_{j,D,m}* \circ \qquad j = 3,\cdots,8 \qquad m=lrM \qquad (18)$$

$$f_D\, b_{3,j,C,m} - \bullet \overset{m}{T}\text{-}JC^{b}7>\backslash Dm * \circ \qquad 7 = {}^{3}> \cdot * >^{8} \qquad {}^{w} = irM \qquad (19)$$

Exactly one of the y_m is one, the others are zero:

$$\sum_{m=1}^{M} ?\, m^{=1} \qquad (20)$$

$$y_m \in [0,1]$$

Similar constraints are used to partition the relative amounts of components C, D, and E in the bottom product of column 3. Since this is a relaxation of the nonlinear program, the optimal solution to this problem will be a lower bound on the optimal solution of the nonlinear program. Furthermore, as the number of intervals increases the solution to the problem described above will approach the global optimum to the nonlinear program.

The general algorithm for the solution of the four and five component problems is as follows:

1. Enumerate the possible separation sequences and compute a lower bound on the global optimum of each sequence.
2. In order of increasing lower bound, formulate and solve a nonlinear program to calculate an upper bound on the cost of the sequence. Discard all sequences whose lower bound is greater than the least upper bound for the problem. If necessary, improve the lower bounds by introducing integer variables to bound the relative flowrates of adjacent components.
3. If the least upper bound is sufficiently close to the smallest lower bound, say within one percent, stop. Report as optimal the solution corresponding to the least upper bound.
4. If the least upper bound differs markedly from the least lower bound, for each remaining sequence, partition the compositions of the mixtures passing through the bilinear splitters and solve the resulting mixed-integer linear program.

The evaluation of the lower bounds in Step 1 involves the solution of one linear program for each sequence. The evaluation of an upper bound in Step 2 is somewhat more involved, requiring the solution of up to one nonlinear

program for each sequence. If it is necessary to partition the composition of the feed to the bilinear splitters, the resulting **mixed-integer linear program** could be large and require a nontrivial amount of computer time to solve.

Solution of the five component example

Table 1 describes the feed and product specifications of a five component sample problem. The fixed cost of the AB separation is 5, plus an additional cost of O.S per unit flow into the column. The fixed cost of the BC separation is 9, plus an additional cost of 1 per unit flow into the column. The fixed cost of the CD column is 3, plus an additional cost of 0.4 per unit flow into the column. The fixed cost of the DE column is 6, plus an additional cost of 0.6 per unit flow into the column. The total fixed cost for this sequence is 23.

We formulate and solve linear programs to evaluate a lower bound on each of the twenty-four possible sequences. Table 4 shows the results. Based on the lower bounds, a nonlinear program is formulated and solved for sequence CDAB. The solution to the nonlinear program has an objective function value of 8S.6S.

This upper bound is smaller that the lower bound for all sequences except CDAB, CABD, and CADB. We discard twenty-one sequences. We note that the optimal solution to the nonlinear program is degenerate. The DE split is decoupled from the AB and BC splits. Figure 4 shows the flowsheet obtained by solving the nonlinear program. In this flowsheet, no material flows from the DE column to either the AB or BC columns. Thus, the optimal solution for sequence CDAB is a feasible solution for the two other sequences and constitutes an upper bound on their global optima.

There is a large gap between the upper and lower bounds for sequence CDAB. To identify the global optimum, it is necessary to improve the quality of one or both bounds. To improve the lower bound, a mixed-integer linear program is formulated, requiring C to D ratio in the bottom product of the third column to be either greater than or less than that of the feed. The optimal solution to this problem, 85.36, is within 0.4% of the least upper bound. This suggests that further effort to optimize this flowsheet is unjustified.

The least lower bound for this problem, 84.86, is within 1% of the least upper bound. The solution corresponding to the upper bound is taken to be the global optimum. The total time required to solve this problem was less than five minutes of processor time on a DEC-20.

A sample four component problem

A feed mixture containing 6,8, 5, and 9 units of A, B, C, and D, respectively is to be separated into three products. The first receives 2, 3, 1, and 3 units of A, B, C, and D. The second receives 1, 4, 1, and 5 units of A, B, C, and D. The balance of the feed goes to the third product. The AB column has a fixed cost of 5.0, plus an additional cost of 0.5 per unit flow of the feed. The BC column has a fixed cost of 4.0, plus an additional cost of 0.3 per unit flow of the feed. The CD column has a fixed cost of 6.0, plus an additional cost of 0.7 per unit flow of the feed.

There are six possible column permutations. A lower bound is established for the cost of each of the six possible permutations by relaxing the nonlinear programs to linear programs and solving them. The nonlinear program for the sequence with the best lower bound (sequence BAC) is formulated and solved. As shown in Figure 5, the resulting upper bound (26.79) is less than or equal to the lower bound for all remaining sequences. Thus, sequence BAC must contain the global optimum for the overall problem. Since the upper bound associated with sequence BAC is within 0.15% of the lower bound, the upper bound for sequence BAC is taken to be the global optimum for the problem.

To solve this problem, it is necessary to solve six linear programs to evaluate a lower bound for each sequence and one nonlinear program to establish an upper bound for sequence BAC. For completeness, nonlinear programs are solved to evaluate upper bounds on the remaining sequences - it is not necessary to evaluate these upper bounds to solve the problem. The evaluation of the lower bounds required a total of 45 seconds of processor time on a MicroVAX II. The solution of the nonlinear program to evaluate the upper bound required 2 minutes, 20 seconds of computer time on an IBM PC-AT.

A sample three component problem

A feed mixture containing 10 units each of components A, B, and C is to be separated into two products. One receives 3, 5, and 3 units of A, B, and C, respectively. The second mixture receives the remainder of the feed, 7, 5, and 7 units of A, B, and C, respectively. The AB column has a fixed cost of 3.0 and an additional cost of 0.6 per unit flow of the feed. The BC column has a fixed cost of 5.0 and an additional cost of 1.0 per unit flow of the feed.

For this problem, there are two possible separation sequences - the AB column followed by the BC column (direct sequence) and the BC column followed by the AB column (indirect sequence). Each is formulated as a linear program and solved. The cost of the direct sequence is 15.6 and that of the indirect sequence is 16.4. The direct sequence is chosen as the less expensive alternative. Figure lb shows the optimal solution to this problem. To solve this problem, it is necessary to solve two (small) linear programs, requiring a total of 7 seconds of computer time on a MicroVAX II.

Nomenclature

$b_{i,k}$	Flow of component k in the bottom product of column i
$b_{i,j,k}$	Flow of component k in the bottom product of column i to destination j
$b_{i,j,k,m}$	Flow of component k in the bottom product of column i to destination j if $y_m = 1$
f_k	Flow of the feed of component k
$k(i)$	The light key of column i
M	The number of partitions if composition in a bilinear splitter is partitioned
$t_{i,k}$	Flow of component k in the top product of column i
$t_{i,k(i),min}$	Lower bound on flow of component k in the top product of column i
$t_{i,j,k}$	Flow of component k from the top product of column i to destination j
y_m	Binary variable, one if composition falls in partition m

References

1. Lu, M. D. Ph. D. Dissertation, Washington University, Saint Louis, Missouri, USA (1984).
2. Mahalec, V. and R. L. Motard, "Procedures for the Initial Design of Chemical Processing Systems," Computers and Chemical Engineering, 1, 57(1977).
3. Mahalec, V. and R. L. Motard, "Evolutionary Search for an Optimal Limiting Process Flowsheet," Computers and Chemical Engineering, 1, 149(1977).
4. Muraki, M. and T. Hayakawa, "Separation Process Synthesis for Multicomponent Products," Journal of Chemical Engineering of Japan, 17, 533(1984).
5. Nath, R. Ph. D. Dissertation, Houston University, Texas, USA (1977).

Acknowledgements

The authors are grateful to the National Science Foundation for support from the National Science Foundation's Engineering Research Center Program, Grant #CDR-8522616 and a National Science Foundation Graduate Fellowship.

	Component				
	A	B	C	D	E
Feed	32	16	20	25	24
Product 5	7	8	3	9	8
Product 6	10	3	5	5	4
Product 7	5	5	6	7	3
Product 8	10	0	6	4	9

Sample Problem Specifications

Table 1

	Product				
	P5	P6	P7	P8	Total
B,C Product Requirements	8,3	3,5	5,6	0,6	16,20
B,C Mixture	2.4,3	3,3.75	4.8,6	0,0	10.2,10.75
Pure B	5.6	-	0..2	-	5.8
Pure C	-	1.25	-	6	7.25
%Top Stream, Column 4	96.6	0	3.4	0	100
%Bottom Stream, Column 4	0	17.2	0	82.8	100

Derivation of Splits for Top (Pure B)

and Bottom (Pure C) Streams Leaving Column 4

Table 2

	Product				
	P5	P6	P7	P8	Total
C,D Product Requirements	3,9	5,5	6,7	6,4	20,25
C,D Mixture	3,3.75	4,5	5.6,7	3.2,4	15.8,19.75
Pure C	0	10.4		2.8	4.2
Pure D	5.25	0	0	0	5.25

Derivation of Minimum Flow

Through Column 1

Table 3

Sequence	**Lower** Bound	Upper Bound	Status
ABCD	100.83	Not calculated	Eliminated
ABDC	**100.44**	Not calculated	Eliminated
ACBD	90.69	Not calculated	Eliminated
ACDB	88.78	Not calculated	Eliminated
ADBC	99.87	Not calculated	Eliminated
ADCB	89.25	Not calculated	Eliminated
BACD	96.63	Not calculated	Eliminated
BADC	97.14	Not calculated	Eliminated
BCAD	96.71	Not calculated	Eliminated
BCDA	108.22	Not calculated	Elixninated
BDAC	96.81	Not calculated	Eliminated
BDCA	108.28	Not calculated	Eliminated
CABD	85.57	Not calculated	Optimal
CADB	84.86	Not calculated	Optimal
CBAD	88.19	Not calculated	Eliminated
CBDA	100.06	Not calculated	Eliminated
CDAB	77.97	85.65	Optimal
CDBA	100.06	Not calculated	Eliminated
DABC	101.04	Not calculated	Eliminated
DACB	88.29	Not calculated	Eliminated
DBAC	100.73	Not calculated	Eliminated
DBCA	109.26	Not calculated	Eliminated
DCAB	87.40	Not calculated	Eliminated
DCBA	103.30	Not calculated	Eliminated

Flowsheet Upper and Lower Bounds

Table 4

Sharp Splits with no bypass

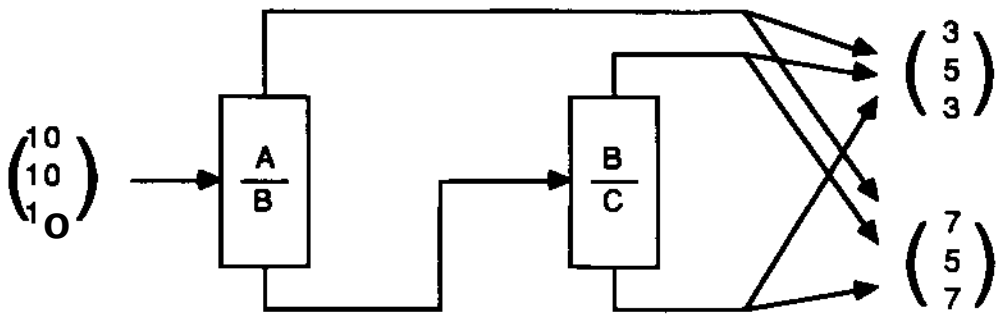

Cost = 46

Figure 1a

Sharp Splits with bypass

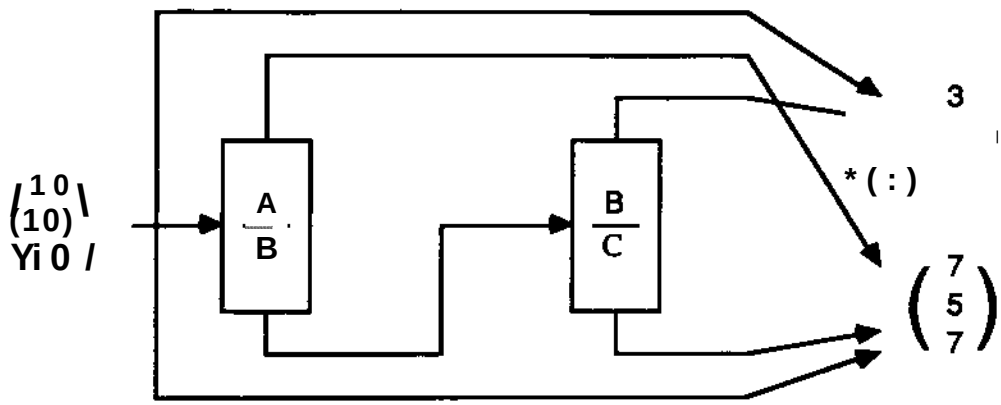

Cost = 15.6

Figure 1b

Effects of Bypass on Sequence Cost

Figure 1

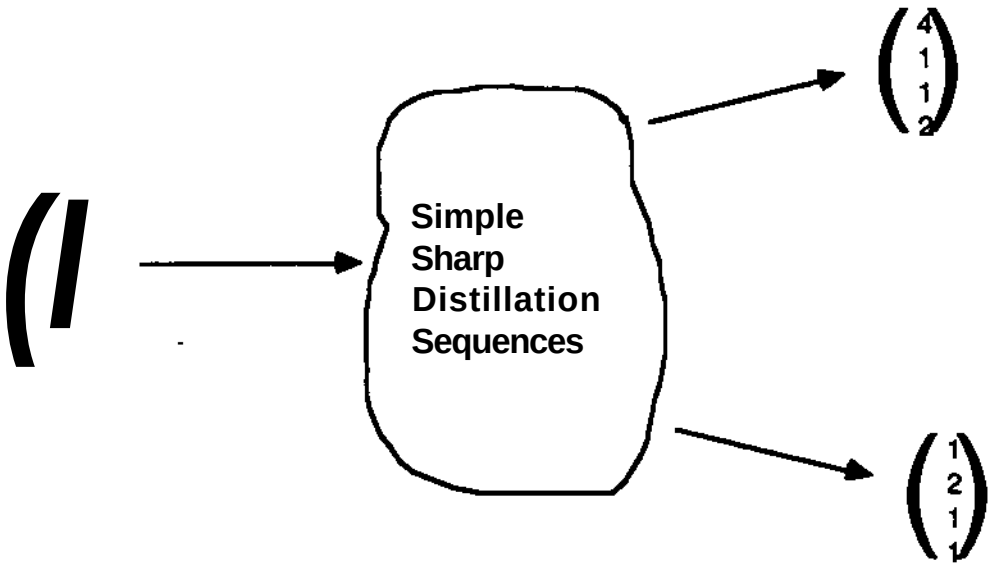

Costs of locally optimal solutions

14.73 15.07

15.57

Locally optimal solutions

Figure 2

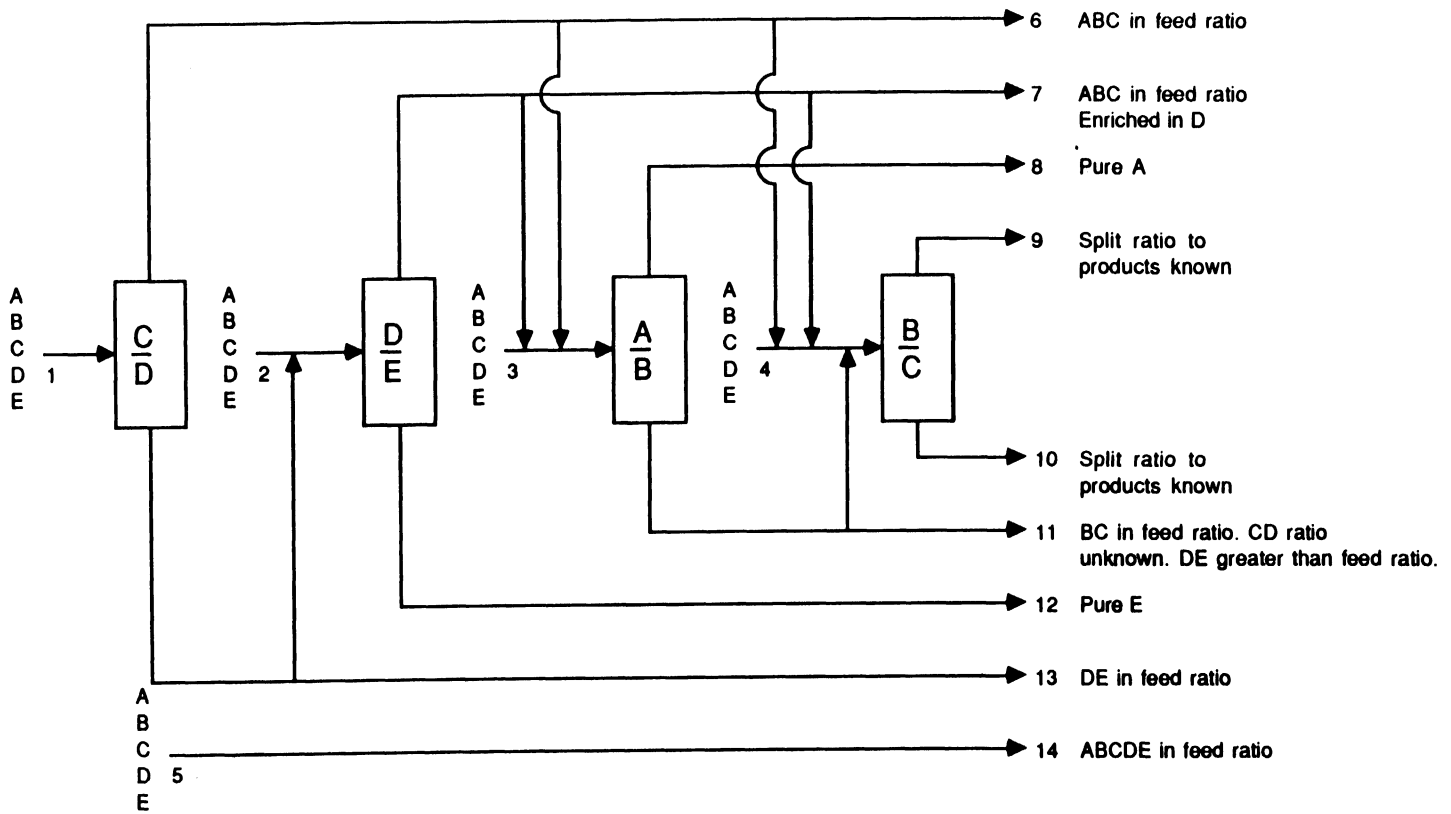

A Five Component Flowsheet

Figure 3

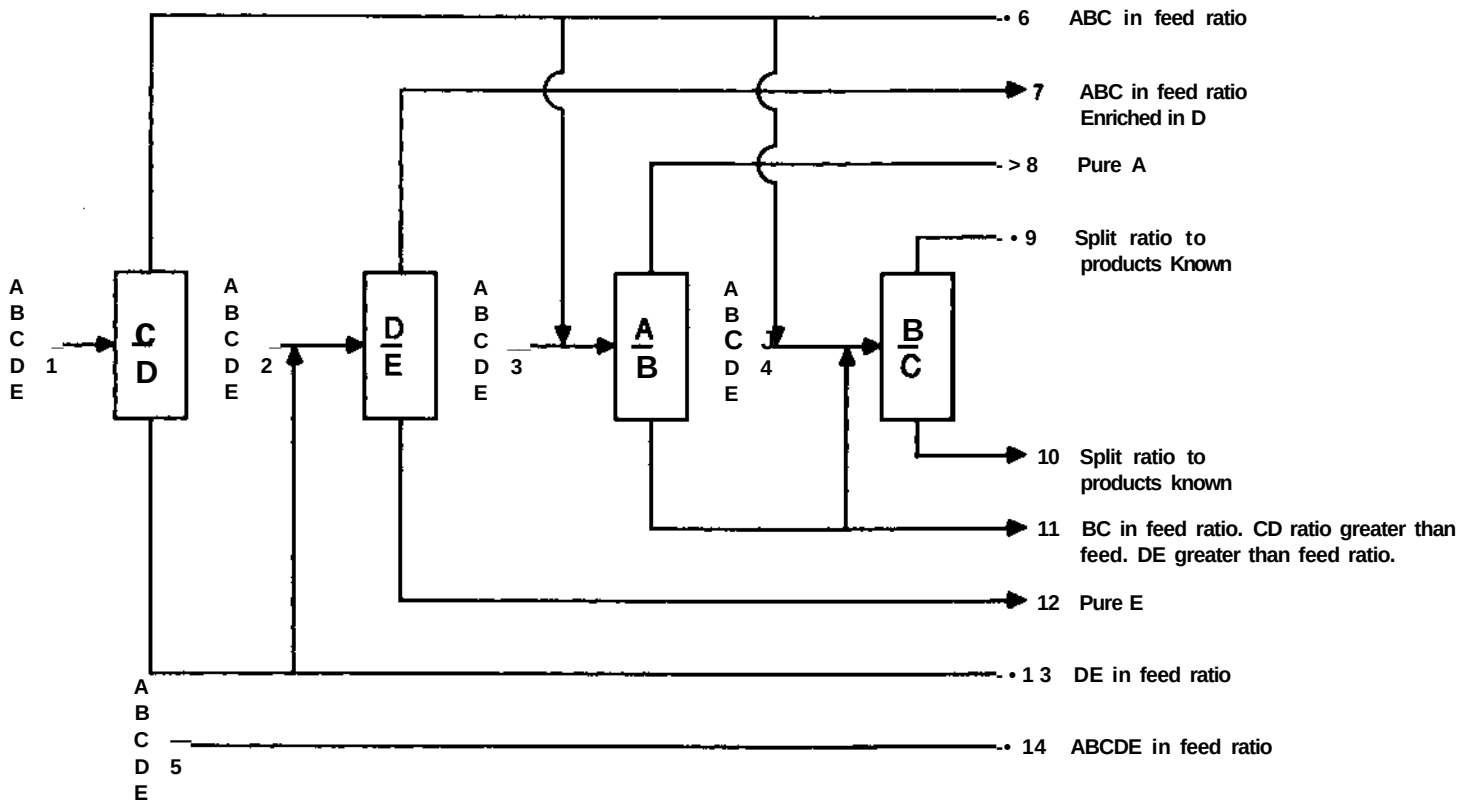

Sample Problem Optimal Solution

Figure 4

Bounding of Sequences

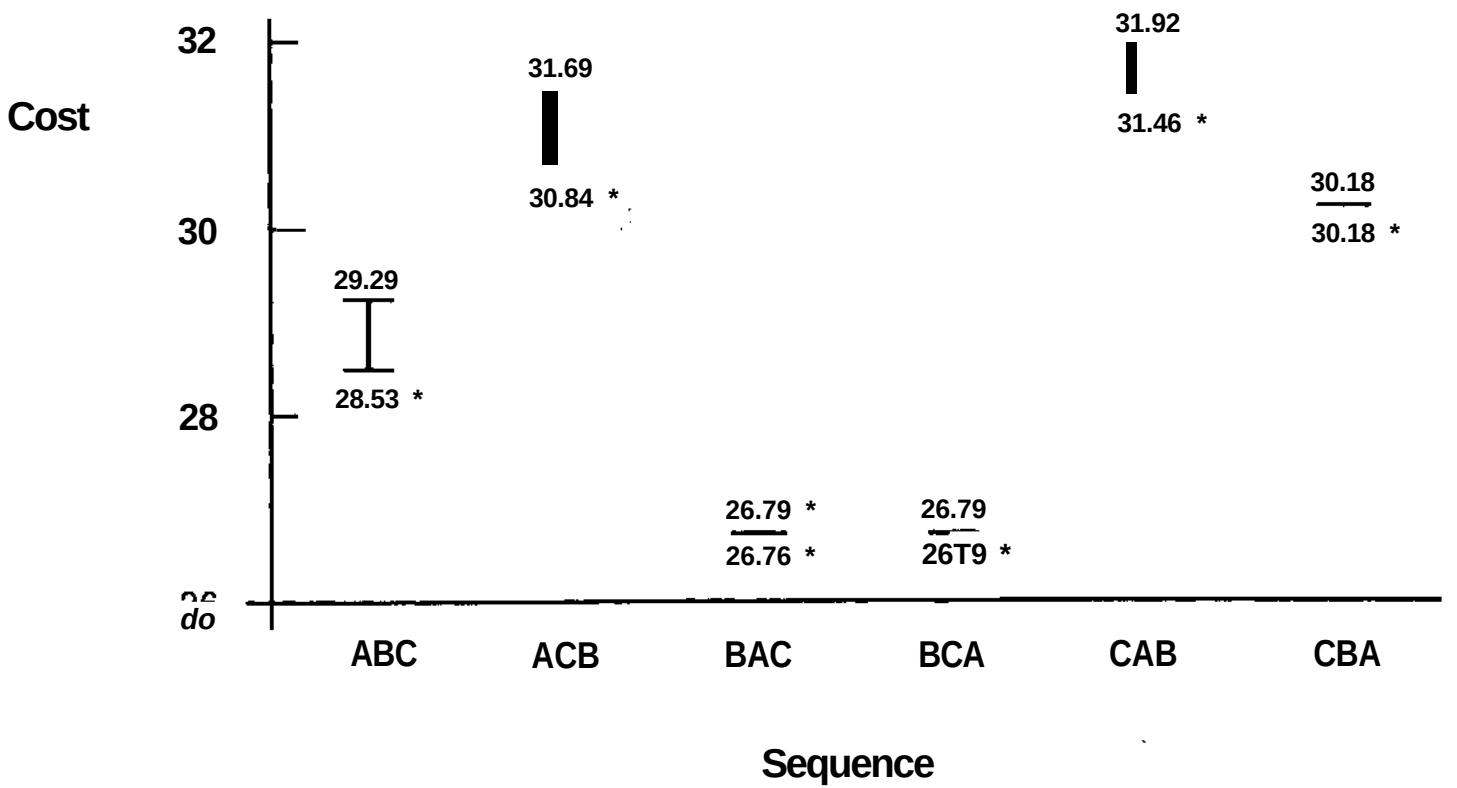

* Problems that must be solved

Figure 5