Carnegie Mellon University
Research Showcase @ CMU

Department of Chemical Engineering | Carnegie Institute of Technology

1987

Process flowsheet optimization : recent results and future directions

Lorenz T. Biegler
Carnegie Mellon University

Carnegie Mellon University.Engineering Design Research Center.

Follow this and additional works at: http://repository.cmu.edu/cheme

Recommended Citation
.

This Technical Report is brought to you for free and open access by the Carnegie Institute of Technology at Research Showcase @ CMU. It has been accepted for inclusion in Department of Chemical Engineering by an authorized administrator of Research Showcase @ CMU. For more information, please contact research-showcase@andrew.cmu.edu.

NOTICE WARNING CONCERNING COPYRIGHT RESTRICTIONS:
The copyright law of the United States (title 17, U.S. Code) governs the making of photocopies or other reproductions of copyrighted material. Any copying of this document without permission of its author may be prohibited by law.

PROCESS FLOWSHEET OPTIMIZATION: RECENT RESULTS AND FUTURE DIRECTIONS

by

L T. Biegler

EDRC-06-27-87

PROCESS **FLOWSHEET OPTIMIZATION** STRATEGIES:

RECENT RESULTS AND FUTURE DIRECTIONS

L. T. Biegler
Chemical Engineering Department
Carnegie-Mellon University
Pittsburgh, PA 15213

Optimization strategies based on detailed and rigorous models of process flowsheets have been of interest to process engineers for the past 25 years. Here we review earlier optimization strategies and emphasize more recent strategies based on Successive Quadratic Programming (SQP). These strategies allow the simultaneous solution and optimization of the process model and thus lead to significant reductions in the computational effort for an optimization study. Several examples are presented to define the optimization problem and demonstrate the performance of the simultaneous strategies. Finally, some open research questions are described and future directions in process optimization are briefly discussed.

Key words: Flowsheeting, Process Simulation, Process Optimization, Nonlinear Programming, Successive Quadratic Programming

Abbreviated Title: FLOWSHEET OPTIMIZATION STRATEGIES

University Libraries
Carnegie Mellon University
Pittsburgh, Pennsylvania 15213

SUMMARY

Application of Successive Quadratic Programming strategies to process optimization has reduced the computational effort by more than an order of magnitude over conventional methods and now creates the potential to make simulator-based optimization with complex process models a powerful tool. This report describes the process optimization problem with a simple flowsheeting model and briefly discusses the infeasible path approach, which permits simultaneous recycle convergence and optimization with SQP. Several improvements to the infeasible path algorithm are then outlined that include better gradient calculation and scaling strategies, a more efficient line search function and more reliable performance through intermediate recycle convergence. These concepts are applied to a large-scale process problem and resulting improvements are demonstrated. Finally, we present a brief discussion of open research questions and directions for future research.

INTRODUCTION

With the application of computers in process engineering, flowsheet models, i.e. steady-state process models of chemical processes, have been developed and widely used in the chemical industry. These flowsheeting packages or process simulators very successfully predict the accurate behavior of a process' steady-state behavior, and are flexible in describing general-purpose processes. A number of process simulators are widely used by chemical and engineering companies (see [21] for a comprehensive list.), and these find frequent use in evaluating and improving proposed process designs, monitoring and analyzing the performance of existing designs and in guiding the redesign or retrofit of inefficient existing processes.

The structure of these simulators is highly modular and this makes it easy for the engineer to quickly set up a flowsheet and choose a set of physical property and equipment performance models of appropriate accuracy and complexity. Almost all commercial process simulators have a structure that is termed sequential modular. Here, instead of specifying the full process model as a single set of nonlinear equations that need to be solved, calculation usually proceeds in the same way that material flows in the process. Process equations are grouped according to the particular unit operation they describe and require inputs that characterize the normal *operating* behavior of a process. For example, simulators require that the flowrates of raw materials be specified rather that the production rate. While this mode allows for the easy construction, modification and use of process simulators, the rigid input-output strategy also leads to inefficient calculation strategies for design and optimization. For example, almost all chemical processes require recycle streams to achieve high conversion of raw material to

streams and input equipment parameters. This may, of course, require some iteration on the equations within each unit Here we use the same notation as in Figure 1 for the mass flowrates of the streams. Superscripts indicate flowrates of individual component flows within these streams. Grouped according to their respective unit operations, the equations are as follows:

1. Reactor Equations: (These nonlinear equations must be solved iteratively within the reactor module.)

$$F/ = F_A + R^A - k_|(F_{||}{}^A F_R{}^B)V\rho/F_R{}^2$$

$$F/ = F/ + R^9 - k_1(F_R{}^A F_R{}^B)V\rho/F_R{}^2 - k_2(F_R{}^B F_R{}^C)V\rho/F_R{}^2$$

$$F/ = R_c - (M/M\wedge k\wedge F/F/JV/i/F/ - *,(F/F/)V\wedge/F,^2 + kj(M\wedge M_B)F_R^A F_R^B V\rho/F$$

$$F/ = R' + [(MyM_B)k_t(F\wedge F\wedge - IC_i(M/M_c)(F/F_{j|}{}^c)]V/>/F_{||}{}^a$$

$$F_R{}^W = (M_w/M_c)k_3(F_R{}^B F_R{}^C)V\rho/F_R{}^2$$

$$F^f = R^1 + (M/M)k(F^C F^{\S})V/>/F^f$$

$$k_f = A_{\S}\exp(-E/RT) \qquad i = 1, \ldots 3$$

2. Heat Exchanger Equations: (In this problem the energy balance is not required so the equations are trivial)

$$F_o^1 = F_m^4 \qquad i = A,B,C,E,P,W$$

3. Decanter Equations: (Here a perfect separation for the waste product is assumed.)

$$F_{wo}^W = F^W \qquad F_w^1 = 0$$

$$i = A,B,C,E_fP$$

V

4. Distillation Column Equations: (Only the product is separated overhead. Some product is retained in the bottoms stream.)

$$F_*^P = F_s' - 0.1\,F_s^e \qquad F_p' = 0$$

$$F_i^1 = F_s* \qquad i = A,B_rC,E$$

$$F/ = 0.1\,F/$$

5. Flow Splitter Equations:

$$F; = ,p.«$$

$$i = A,B,C,E,P$$

$$R'' = (1 - \eta)F_{e}'$$

6. Recycle (or Tear) Equations: (In all sequential modular simulators, **these tear equations complete the mass balance and make up the outer calculation loop.)**

$$R^{1} - R^{fl} = 0 \qquad i = A,B,C,D,E,P$$

The objective function is given in terms of the net sales minus fixed charge, raw material, utility and waste disposal costs. This is normalized by the plant investment cost to give an annual rate of return. Using the cost coefficients, C_i, in [23] gives the following objective function:

$$\phi = (C_P F_P + C_V F_V - C_A F_A - C_B F_B - C_R F_R - C_W F_W - C_{FC} V\rho)/C_{PI} V\rho$$

Additional kinetic parameters as well as more information on the objective function can be found in the supporting references [1,9,11,17,20,23]. In addition, the following inequality constraints are imposed:

$$580 <> T \leq 680$$

$$0 \text{ £ } F_p \leq 4763$$

nonnegativity on all flows

For fixed feeds and *p.* any three of the above variables can be selected as decision variables for optimization. Because the above models are restricted to input-output form, however, only certain decision variables are available. For this example a typical choice of decisions is reactor temperature (T), reactor volume (V) **and** split fraction *(if).* We denote this vector of decision variables x.

Note that the simple models given above can be replaced module by module by much more complex ones without disturbing the other modules or the overall calculation sequence of the flowsheet. It is easy to see that with complicated thermodynamic and unit operations models, the simulation may consist of many thousands of variables and equations that may be totally transparent to the user. In fact, the only variables that need to be known for overall flowsheet convergence are the recycle flow rates. We denote the vector of tear variables (R) as y, the corresponding calculated variables (FT) as w(y) and define the flowsheet convergence problem as:

Solve: $h(y) = y - w(y) = 0$

Since all other variables need not be accessed explicitly and equations are buried within their appropriate models, only very simple algorithms (such as direct substitution) are generally applied for recycle convergence. The structure of the optimization problem is therefore:

$$\text{Max } \phi(x)$$

$$\text{s.t. } g(x) \leq 0$$

where it is required that the equations $h(y) = 0$ are solved for every evaluation of the functions jt(x) and g(x).

Typically a process optimization problem with the above structure can be very time-consuming to solve if complex process models are used. Early studies applied direct search methods (e.g. Hooke-Jeeve, Complex search or adaptive random search) to the flowsheet and required up to several hundred simulation time equivalents to come close to an optimal solution [1,10,11,13,14,20,23,27]. Friedman and

Pinder [13] also applied more sophisticated gradient-based strategies to the flowsheet and found only marginal improvements in performance. Here in order to calculate gradients, a decision variable is perturbed and the entire flowsheet is reconverged. Because of slowly converging recycle solvers, however, this procedure can be very inefficient. Also, typically loose error tolerances will corrupt the accuracy of the gradients and lead to poor performance. To get around these problems with "feasible path" or "black-box" optimization strategies, we develop a more recent strategy based on reformulating the process optimization problem.

Infeasible Path Optimization

Instead of considering the simulation problem as a black box, we would like to incorporate the recycle convergence equations directly into the optimization problem. By formulating the problem as:

$$\begin{aligned} \text{Min} \quad & ^{\wedge}(x,y) \\ \text{s.t.} \quad & g(x,y) \; j\pounds \; 0 \\ & h(x,y) = y - w(x,y) = o \end{aligned}$$

we have combined the optimization loop and the most slowly converging calculation loop. This occurs of course at the expense of increasing the size of the optimization problem. To solve this nonlinear programming problem, we choose an algorithm that requires few function calls (these require evaluation of complex flowsheet models) and does not need to converge the equality constraints completely for intermediate function evaluations.

Here, the Successive Quadratic Programming (SQP) algorithm appears to be the method of choice. Numerous studies indicate (see [16,22]) that it generally requires the fewest function evaluations. Also, inequality and equality constraints are linearized at each iteration and

converge as progress is made toward the optimum. To illustrate this method in the context of flowsheet optimization, consider the contour plot in Fig. 2a. Here we consider an idealized flowsheet in the space of x and y where the tear constraint, h(x,y) = 0 is represented as a solid line. With the "black box" approach the optimization proceeds in the space of x and the simulation operates in the space of y with x fixed, as seen in Fig. 2a. Note that the vertical steps in this figure represent computationally expensive simulations. On the other hand, the infeasible path approach with SQP requires setting up and solving the following quadratic program at each iteration:

$$\min_{d} \quad \nabla\phi^{T}d + \tfrac{1}{2}d^{T}Bd$$

$$\text{s.t.} \quad g(x^{*},y') + \nabla g(x',y')^{T}d \leq 0$$

$$h(x',y^{4}) + \nabla h(x^{f},y')^{T}d = 0$$

in the space of x and y. The solution of the quadratic program determines a search direction, d. A line search that minimizes some merit function determines a step size along this direction for the next point. To construct the quadratic program, function and gradient information must be evaluated from the flowsheet. These require single flowsheet passes for each function evaluation or gradient perturbation. The Hessian matrix, B, is approximated using quasiHMewton updating formulae and needs no additional information from the flowsheet.

Kaijaluoto [17] applied this strategy to the Williams-Otto process in the previous section, and required less than 10 equivalent simulation times to optimize the process. In previous studies several hundred simulation time equivalents were typically required. Even from poor starting points (as given in [23]) we found this strategy to perform efficiently and reliably on this problem.

However, a number of issues need to be considered in implementing this approach to more complex process models. Performance of the strategy can be influenced by methods for calculating gradients, problem scaling, and the choice of the merit function used in the SQP algorithm. Moreover, some safeguards need to be enforced because the infeasible path method may choose a point which may cause an error in the simulator. Such a failure can be disastrous as the user is then left with neither an optimal nor a feasible point. These issues are explored in the next section.

IMPROVEMENTS AND ENHANCEMENTS TO THE INFEASIBLE PATH APPROACH

Here we consider a number of options for improving the efficiency and reliability of the infeasible path approach. Following this section we present a process case study that summarizes the effect of these enhancements.

Gradient Calculation Strategies

The most straightforward way of calculating gradients is simply to perturb the decision (x) and tear variables (y) and execute a full flowsheet pass with the recycle streams torn. Some computational savings can be had by realizing that many of the decision variables (such as in Fig. 1) require only partial flowsheet perturbations. In the implementation within the sequencing routine of a process simulator, this strategy, termed direct loop perturbation [3,5], is very easy to implement.

A potentially more accurate and efficient strategy requires gradients to be calculated module by module [3]. Here block Jacobians

and intermediate gradients can be evaluated for each module and the desired gradients for the tear and decision variables can be obtained by chainruling the individual Jacobians. From Figure 1 it is easy to see how this strategy leads to a reduction in the number of module evaluations. For example, evaluation of the gradient with respect to reactor volume **requires only perturbation** of **the reactor module along** with chainruling of existing Jacobians, rather than perturbation of the entire flowsheet.

Improving the accuracy of flowsheet gradients has also been the subject of several studies [3,5,17]. Here the chainruling strategy offers an advantage because analytic gradients and Jacobians (which are available for simple modules) can be substituted for module perturbations. Also Kaijaluoto [17] considered choosing an appropriate perturbation size by balancing roundoff and higher order Taylor series error. Estimation of these errors, however, requires additional flowsheet perturbations or more knowledge of the process simulation problem. Finally, an analysis of errors resulting from different gradient calculation approaches can be found in [3].

Choice of a Line Search Function

This aspect of the infeasible path approach is rooted in theoretical properties of the SQP algorithm. Using an analogy to Newton's method for solving nonlinear equations, it is often necessary to have some control over stepsize to enforce global convergence from poor starting points. Close to the solution, however, the rate of convergence can be poor if full steps are not taken along the search direction. The original line search (or merit) function developed for SQP is the exact penalty function [15,22]:

$$P(x,y) = \wedge(x.y) \text{«•} *(Ig_j.(x.y)_4 * I \mid h_i(x,y) \mid)$$

where g_i (x,y) = max(O,g_j (x,y)) and a is a penalty parameter. Using this function to determine a stepsize along a QP-generated search direction, one is guaranteed, under mild conditions, to converge to at least a local optimum from any starting point. However, the function **may lead** to small stepsizes and slow convergence when close to the optimum.

Several remedies have been proposed for the problem of slow convergence. Along with a number of researchers [24], we have replaced the exact penalty function with an augmented Lagrange function:

$$L'ix.y) = fkx.y) + u^J g\{x.y\ + v^T hix.y) + (a/\%\ \ \ g\wedge h\ \ \ ^2$$

where the multipliers u and v are calculated by the quadratic program. As shown in [4,24], this function preserves the global convergence property but also allows full steps to be taken in a neighborhood about the optimum.

As will be illustrated later, the exact penalty function can lead to poorer performance as the optimum is approached. This is especially true if errors exist in the gradients and the problem becomes ill-conditioned. Because of theoretical properties of the augmented Lagrange function, we obtain better performance of the algorithm near the optimum as a result of its accepting full steps generated by the quadratic program [4].

Scaling of the Optimization Problem

The solution to the quadratic program (QP) at each iteration of

SQP is invariant to changes in the scaling of variables or objective and constraint functions. Moreover, the quasi-Newton updating formula for calculating the Hessian matrix, B, is also scale invariant. Consequently, scaling the process optimization problem needs to be motivated by only two concerns.

First, despite the scale invariance properties of quadratic programming, gradients may vary over several orders of magnitude and thus make the problem ill-conditioned. This could lead to QP solutions that are corrupted by roundoff error. In solving linear equations and *linear* programs several variable and function scaling algorithms have been developed that attempt to improve the conditioning of the problem. However, numerical tests of these algorithms (see [26]) do not reveal significant advantages in performance. Instead, the choice of a good scale factor seems largely to be problem dependent. To deal with ill-conditioned QP's we calculate the condition number of the B matrix at each iteration. For high condition numbers we can assume the problem is poorly scaled and thus rescale to improve performance.

Also, variable scaling can greatly influence performance of SQP through initialization of the B matrix. Here the B matrix is an estimate of the Hessian of the Lagrange function and proper initialization should be based on second derivative information at the starting point. Since this information is frequently too expensive to calculate, the B matrix is usually set to the identity matrix, although through variable scaling this matrix can implicitly be set to some other diagonal, positive definite form. However, without some knowledge of higher order derivatives, this choice is arbitrary. To somehow reflect the nature of the problem variables we have adopted the heuristic of normalizing the variables by their bounds, once these are chosen appropriately [4]. As will be seen

this strategy works well even compared with problems where the scale factors were chosen by trial and error.

Intermediate Convergence to Aid SQP Performance

As mentioned above, certain safeguards need to be imposed as a result of moving in an infeasible space. One option that has been applied with some success is the use of a trust region [12] in the early stages of the SQP algorithm. Also since the estimate of the Hessian is initially poor, it seems reasonable to limit the length of the search direction and let successive points build up the approximation of the Hessian. Chen and Stadtherr [8] report some numerical tests of this strategy for process optimization.

Another option is to remain on or close to the feasible space. Here it is possible to solve the full quadratic program at each iteration but to apply a few iterations of the recycle convergence algorithm (with X fixed) before proceeding to the next QP subproblem. A pictorial representation of this procedure is given in Fig. 2c. The intention, of course, is that full or partial convergence will improve poor starting points and lead to fewer iterations. Moreover, since the full QP is constructed, the gradients with respect to x will be more accurate than with a "black box" method, where the flowsheet is reconverged for each perturbation. Biegler and Hughes [7] developed two feasible variant strategies that use full flowsheet convergence between SQP iterations. More recently, Kisala et al [18] reported some cases where partial convergence could be more advantageous than either infeasible path or full intermediate convergence. Finally, Lang and Biegler [19] developed an algorithm that includes systematic ways of performing partial convergence along with a more efficient Broyden convergence algorithm.

CASE STUDY OF IMPROVEMENTS TO INFEASIBLE PATH

To demonstrate the effect of some of the improvements described above, we consider a comprehensive flowsheet optimization problem. Figure 3 shows a flowsheet for the propylene. chlorination process. Propylene feed is mixed with the recycle loop and with chlorine feed. The mixture reacts in gas phase to form allyf chloride as well as heavier chlorinated products and hydrogen chloride. The reactor effluent is cooled by a quench loop which also stops the reaction. After further cooling the stream is separated in a distillation column to remove HCl, chlorine and propylene overhead. The bottoms product, consisting of chlorinated compounds, is further separated into allyl chloride product and dichlorinated byproducts. In the recycle, HCl is recovered in a scrubber/dryer system from propylene and chlorine as boiling hydrochloric acid. The remainder is then vented to minimize buildup of impurities and recycled back to the feed.

This process was simulated on SPAD, a sequential modular simulator developed at the University of Wisconsin. The process models were of intermediate complexity and are made up of several hundred equations. More details of the process model and parameters can be found in [4,6]. Because the model deals with an existing process the optimization problem is posed as:

Max {Sales - Raw material}

s.t. product purity £ 99%
pressure increase across recycle compressor £ 10 psi
reactor inlet temperature £ 90 F

mass and energy balances must be satisfied
(recycle equations are converged)

Nine decision variables are selected for this optimization problem. These are indicated by the circled variables in Fig. 3. A complete

description of the optimization problem along with starting points, product prices and performance statistics can be found in [6]. It is instructive to consider how the performance of the optimization strategy changes as a result of the improvements described above.

The original application to this flowsheet used the SQP algorithm with an exact penalty function. A good scaling vector was determined by trial and error and a direct loop perturbation strategy was used to calculate the gradients used in the QP. The resulting formulation required 45 simulation time equivalents (STE's) to reach the optimum. With more careful attention paid to the accuracy of the derivatives the performance was improved to 34 simulation time equivalents. In the same study, two feasible variant algorithms were applied. These differed from each other only slightly and both required convergence of the flowsheet at intermediate points between SQP iterations. This safeguard allowed faster convergence and despite the exact penalty line search function and inefficient derivative calculations, both feasible variant approaches required the equivalent time of only 29 simulations.

On closer examination of these results, one sees that, while excellent progress is made initially, several iterations are required in the neighborhood around the optimum before convergence occurs. This may be due to inexact gradients and their use in evaluating the Kuhn-Tucker tolerance, as well as the slow convergence properties of the exact penalty line search. To remedy this situation the chainruling strategy outlined above was used for gradient calculation [3]. Here analytic Jacobians are supplied for mixers, splitters and the compressor units. Thus, this strategy leads to more accurate derivatives with fewer module perturbations. The result is that the infeasible path algorithm now requires only 23 STE's to reach the optimum.

Replacing the exact penalty function with the augmented Lagrange line search function given above also makes a substantial difference. Because this function allows full SQP steps to be taken in the neighborhood of the optimum, the slow convergence noted before can be eliminated. Applied to this problem from the same starting points as for the previous cases, we now require only 13 equivalent simulation times for optimization. Finally, as a result of the heuristic scaling algorithm sketched above, performance of the infeasible path algorithm is improved even further; only 9 simulation times are required [4].

The improvements demonstrated with this case study, along with later work on strategies that use partial intermediate convergence [19], have recently been implemented on the FLOWTRAN process simulator [25]. Developed by the Monsanto Co. and continously used and updated since 1966, this simulator has been used widely in industry and academia, and is currently a valuable teaching tool in many chemical engineering curricula. The optimization implementation on FLOWTRAN is fairly transparent to the user, allows easy specification of the process optimization problem, and is flexible enough to accommodate a number of optimization strategies including infeasible path with partial or full intermediate convergence. This implementation has been used to solve over a dozen new optimization examples as well as the propylene chlorination problem described above. Some of these examples have been reported in [19]. Here one sees that the optimization results are still consistent with the above case study. Even on fairly large problems we are able to obtain optimal solutions within ten simulation times.

PROBLEMS FOR FUTURE CONSIDERATION

The SQP based optimization strategies described above allow much more flexibility and efficiency for process flowsheeting. Naturally this leads to a number of questions that need to be considered for further improving the optimization strategy. A partial list of these is given below.

Larger Problems

Many chemical processes involve **a** large number of chemical components; including these components in the optimization problem still may lead to a prohibitive amount of work in calculating gradients. Here although the "Mack box" strategy may be more efficient than the infeasible path strategy in this case, both optimization strategies are too expensive for these problems. An open question is whether systematic ways exist for combining or eliminating unnecessary components (e.g. those that do not participate in reactions and are easily separated) and still guarantee convergence to the flowsheet optimum.

Modules that have Differential Equation Models

Although these models are self-contained within modules and can be treated normally, these models can be extremely time-consuming because they frequently require complex physical property calculations at each integration step. An example of this occurs when the reactor model in the Williams-Otto flowsheet is replaced by a packed bed model. Because of these issues it may be useful to include convergence of these difficult and time-consuming models in the optimization loop. Typically, higher order methods can then be applied since they require fewer integration steps and fewer function evaluations. A preliminary

study that outlines this approach is presented in [9]. For models that require complex thermodynamic calculations, it is demonstrated this approach has the potential to improve the efficiency by an order of magnitude.

Formulation of Process Optimization Problems for more Efficient Solution

The infeasible path optimization strategy is but one way of improving performance through different and more flexible formulation of the process problem. In addition, several systematic ways need to be explored that include exploiting linear functions wherever possible (e.g. mass balances and stream flows). This reduces the work required for gradient calculation and by the optimization algorithm. Further knowledge of the process can be applied in choosing appropriate decision variables and good initial values for them. Finally, the optimization problem needs to be modeled so that nondifferentiabilities and discontinuities present in process and cost functions are avoided or eliminated. Otherwise, these difficulties can be serious obstacles to obtaining successful solutions to process optimization problems.

CONCLUSIONS

Compared to earlier strategies which require up to several hundred equivalent simulation times to reach an optimal solution, SQP-based strategies offer clear advantages and thus make frequent and efficient process optimization studies possible. In fact, these methods also offer the possibility of using fairly rigorous models for the on-line optimization of operating plants.

After describing the structure of steady-state process optimization

problems using a very simple process model, we sketched the application of the SQP algorithm for simultaneous convergence and optimization. A number of factors were then considered that led to improvement of the optimization strategy. These include more efficient and accurate methods for gradient calculation, better merit functions for choosing stepsizes and simple, heuristic scaling strategies. In addition, the advantages of intermediate recycle convergence were outlined. Recent studies indicate that for poorly initialized starting points and badly scaled problems, full or partial convergence can lead to more efficient and reliable performance. Finally, for demonstration purposes, these concepts have been implemented on FLOWTRAN, a large-scale commercial process simulator.

However, a number of open questions remain in process optimization. These include handling problems of large size and model complexity. Also many questions regarding the appropriate formulation of process simulator-based problems for more efficient solution have yet to be explored. These represent interesting and fruitful areas for future research.

REFERENCES

[1] Adelman, A. and W.F. Stevens, "Process Optimization by the Complex Method", AIChE J., 18, 1, p. 20 (1972)

[2] Ballman, S. H. and J.L. Gaddy, "Optimization of Methanol Process by Flowsheet Simulation", I & EC Proc. Oes. Dev., 16, 3, p. 337, (1977)

[3] Biegler, LT., "Improved Infeasible Path Optimization for Sequential Modular Simulators, Part I: The Interface", Comp. and Chem, Eng., 9, 3, p. 245, (1985)

[4] Biegler, LT. and J.E. Cuthrell, "Improved Infeasible Path Optimization for Sequential Modular Simulators, Part II: The Optimization Algorithm", Comp. and Chem. Eng., 9, 3, p. 257, (1985)

[5] Biegler, LT. and R.R. Hughes, "Infeasible Path Optimization of Sequential Modular Simulators" AIChE J., 28, 6, p. 994 (1982)

[6] Biegler, LT. and R.R. Hughes, "Optimization of Propylene Chlorination Process: A Case Study Comparison of Four Algorithms" Comp. and Chem. Eng., 7, 5, p. 645 (1983)

[7] Biegler, LT. and R.R. Hughes, "Feasible Path Optimization for Sequential Modular Simulators" Comp. and Chem. Eng.# 9, 4, p. 379 (1985)

[8] Chen, H-S and M.A. Stadtherr, "A Simultaneous Modular Approach to Process Flowsheeting and Optimization", AIChE J., 31, 11, p. 1843, (1985)

[9] Cuthrell, J.E. and LT. Biegler, "Simultaneous Solution and Optimization of Process Flowsheets with Differntial Equation Models". IChemE Symp. Ser. #92, p. 13 (1985)

[10] DiBella, C.W. and W.F. Stevens, "Process Optimization by Nonlinear Programming", I & EC Proc. Des. Dev., 4, 1, p. 16 (1965)

[11] Findley, M.E., "Modified One-at-a-Time Optimization". AIChE J., 20, 6, p. 1154 (1974)

[12] Fletcher, R., "Practical Methods of Optimization, Vol. 2, Constrained Optimization", Wiley & Sons, New York (1981)

[13] Friedman, P. and K.L Pinder, "Optimization of a Simulation of Chemical Plants", I & EC Proc. Des. Dev., 11, 4, p. 512 (1972)

[14] Gaines, L.D. and J.L Gaddy, "Process Optimization by Flowsheet Simulation", I & EC Proc. Des. Dev., 15, 1, p. 206 (1976)

[15] Han, S-P, "A Globally Convergent Method for Nonlinear Programming", J. Opt. Theo. and Appl., 22, 3, p. 297 (1977)

[16] Hock, W. and K. Schittkowski, "Test Examples for Nonlinear Programming Codes", Lecture Notes in Economics #187, Springer (1981)

[17] Kaijaluoto, S., "Process Optimization by Flowsheet Simulation" Technical Research Center of Finland, Publication #20 (1984)

[18] Kisala, T.P., ScD Thesis, Massachusetts Institute of Technology, Cambridge, MA (1985)

[19] Lang, Y-D and L.T. Biegler, "A Unified Algorithm for Flowsheet Optimization", submitted to Comp. and Chem. Engr. (1986)

[20] Luus, R. and T.H. Jaakola, "Optimization by Direct Search", AIChE J.. 19, 4, p. 760 (1973)

[21] Motard, R.L., M. Shacham and E.M. Rosen, "Steady State Process Simulation", AIChE J., 21, 3, p. 417 (1975)

[22] Powell, M.J.D.. "A Fast Algorithm for Nonlinearly Constrained Optimization Calculations", Dundee Conf. on Num. Analysis (1977)

[23] Ray, W.H. and J. Szekely, *Process Optimization.* Wiley & Sons,. New York (1973)

[24] Schittkowski, K., "The Nonlinear Programming Algorithm of Wilson, Han and Powell with an Augmented Lagrangian Type Line Search Function", Numer. Math., 38, p. 83 (1982)

[25] Seader, J.D., W.D. Seider, and A.C. Pauls, *FLOWTRAN Simulation - An Introduction,* 2nd edition, CACHE Corp. (1977)

[26] Tomlin, J.A., "On Scaling Linear Programming Problems", Math. Prog., 4, p. 146 (1975)

[27] Umeda, T., A. Hirai and A. Ichikawa, "Process Synthesis via Optimization",Chem. Eng. Sci., 27, p. 795 (1972)

[28] Williams, T.J. and R.E. Otto, "A Generalized Chemical Processing Model for the Investigation of Computer Control", Trans. IEE, 79, p. 458 (1960)

Figure Captions

1. Flowsheet of Williams - Otto Process

2a. Black Box Optimization Strategy

2b. Infeasible Path Optimization Strategy

2c. Intermediate Convergence Optimization Strategy

3. Flowsheet for Propylene Chlorination Process

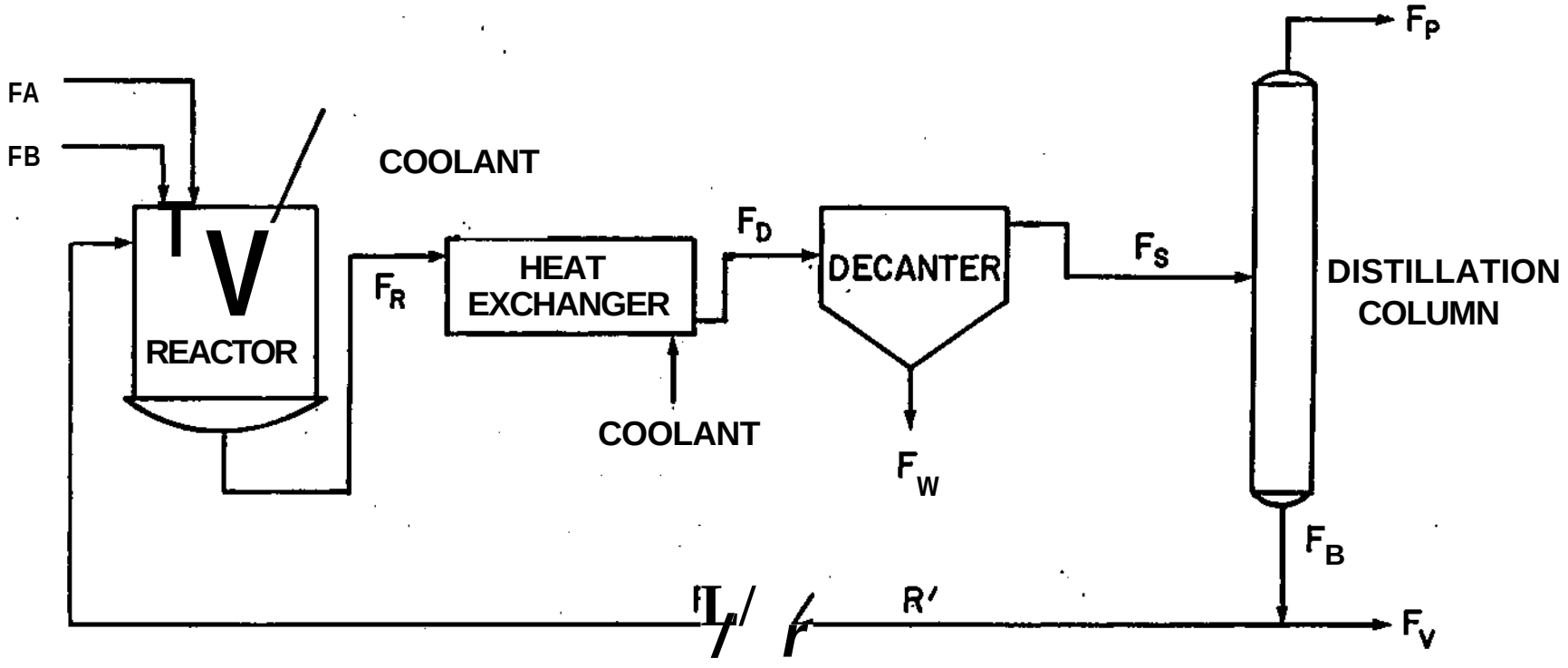
FA
FB
T
V
REACTOR
COOLANT
F_R
HEAT
EXCHANGER
COOLANT
F_D
DECANTER
F_W
F_S
DISTILLATION
COLUMN
F_P
F_B
R'
F_V

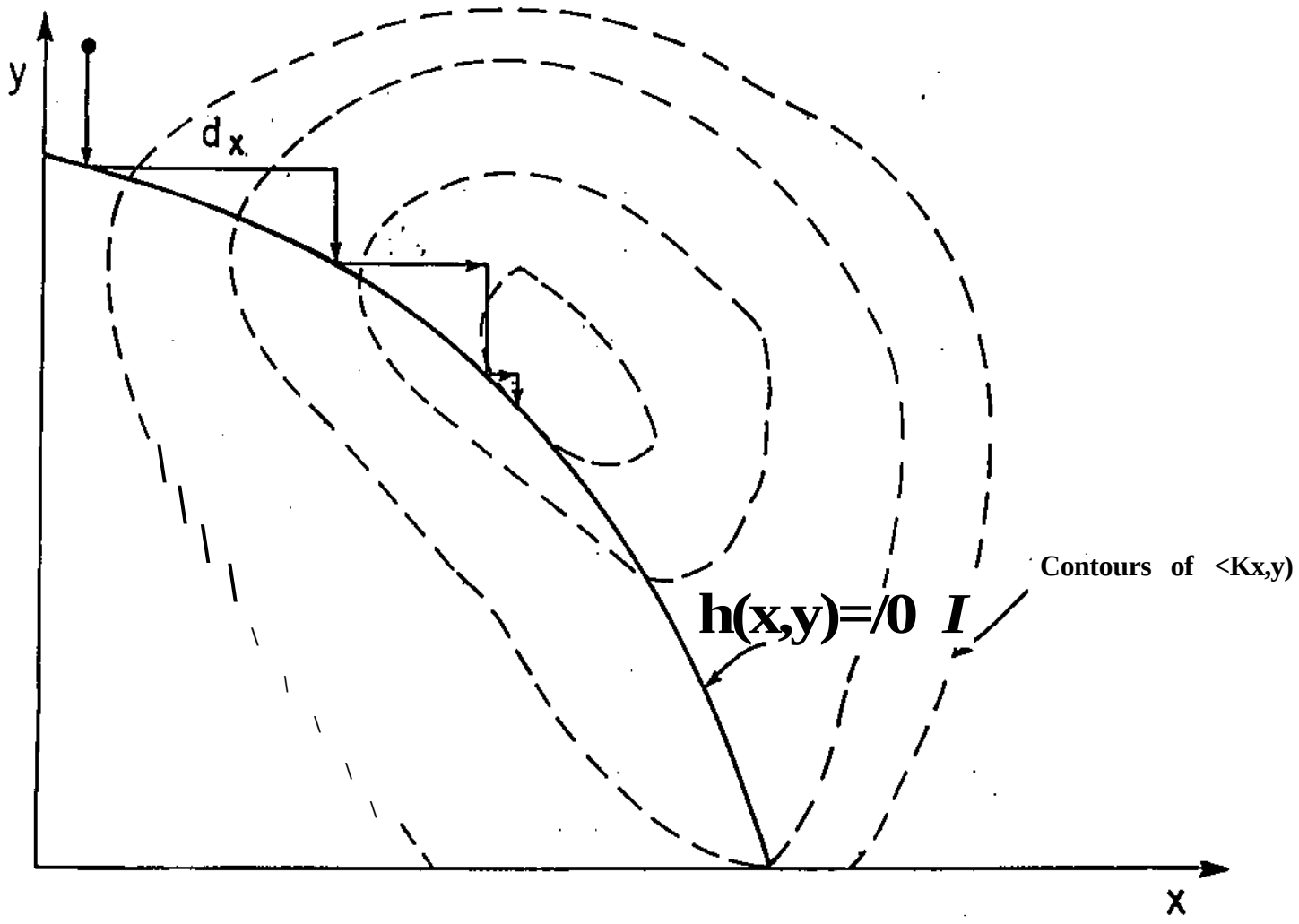
y
d_x
h(x,y)=/0 I
Contours of <Kx,y)
x

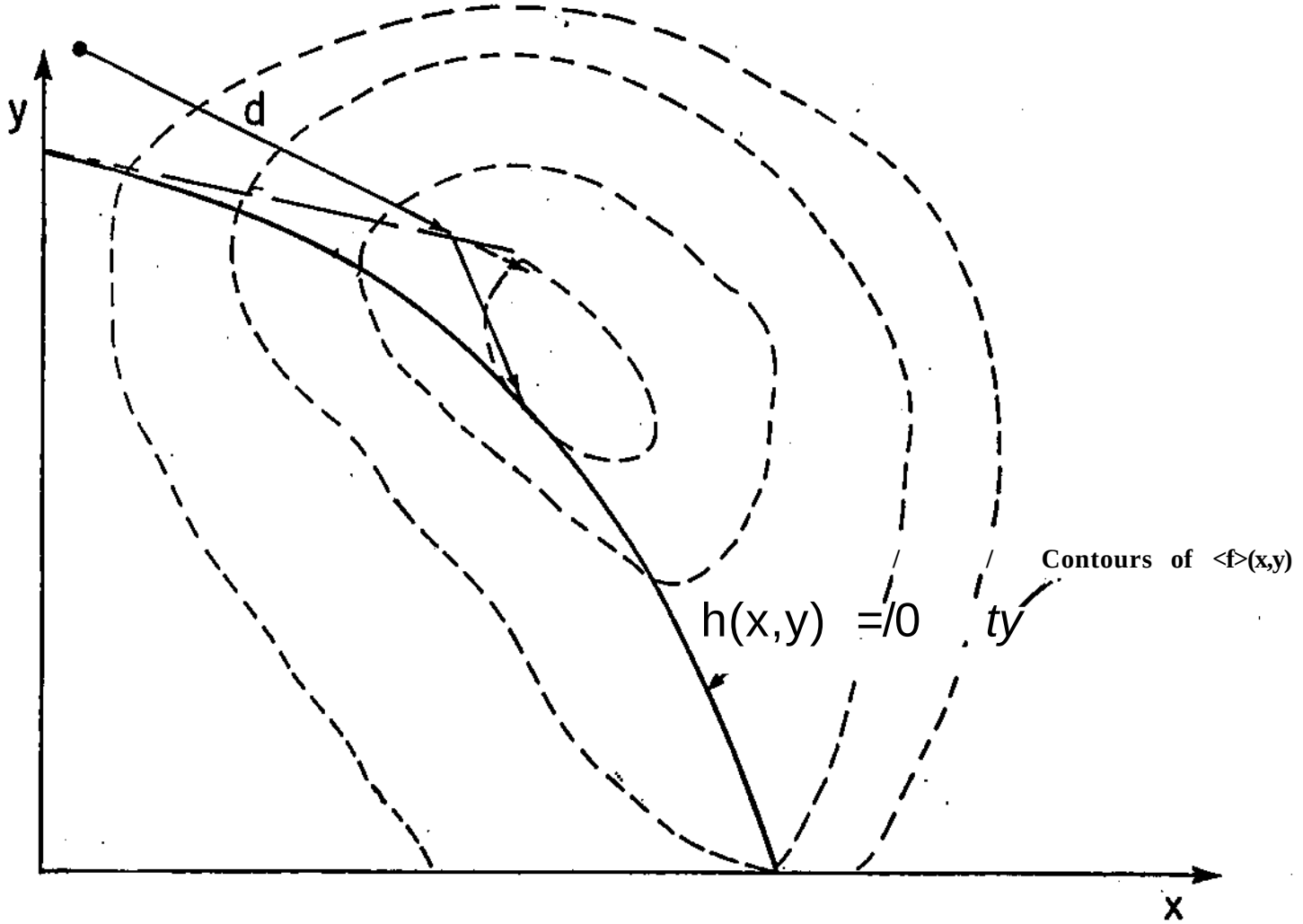
y
d
h(x,y) =/0
ty
Contours of <f>(x,y)
x

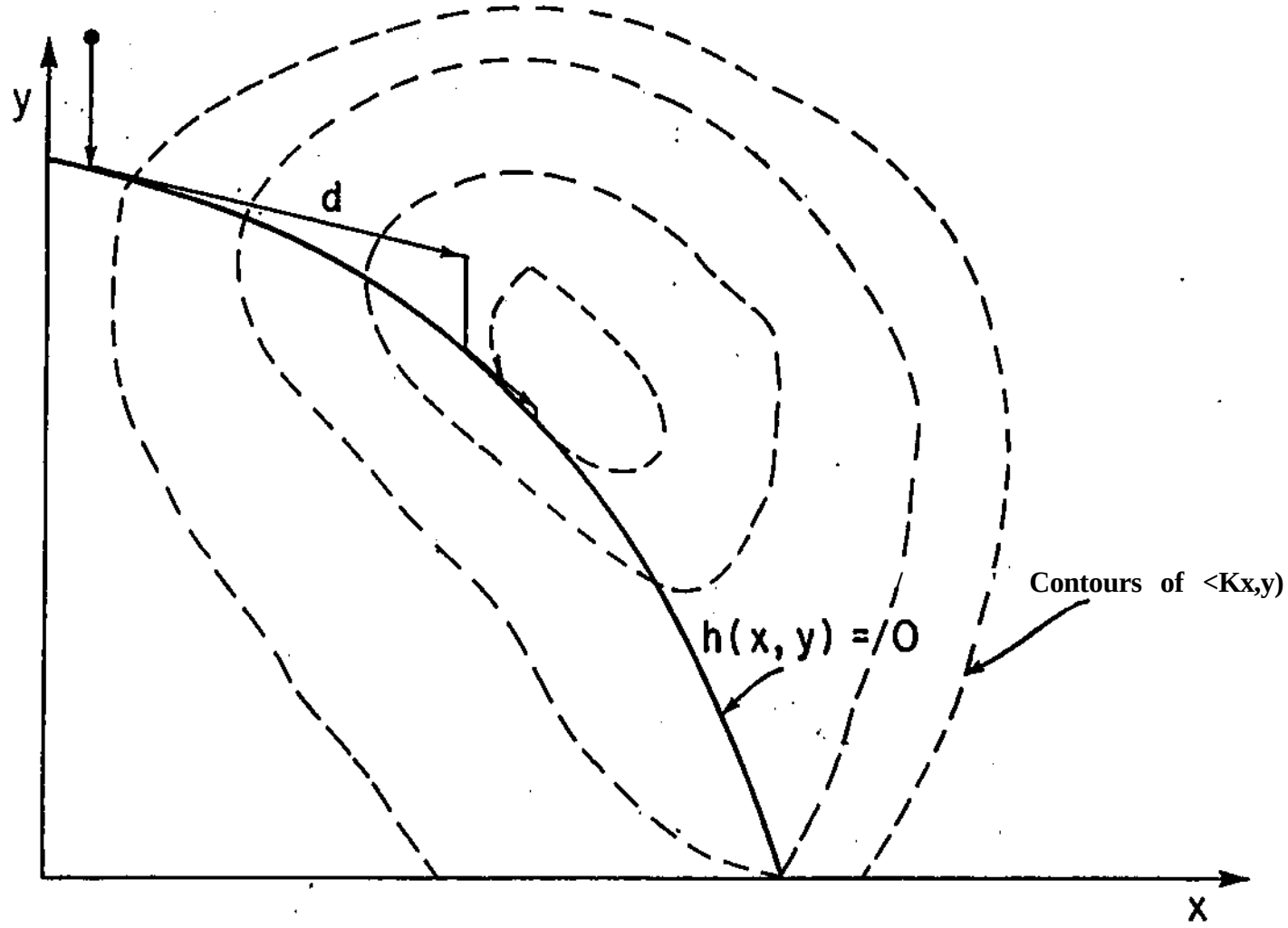
y
d
h(x, y) =/O
Contours of <Kx,y)
x

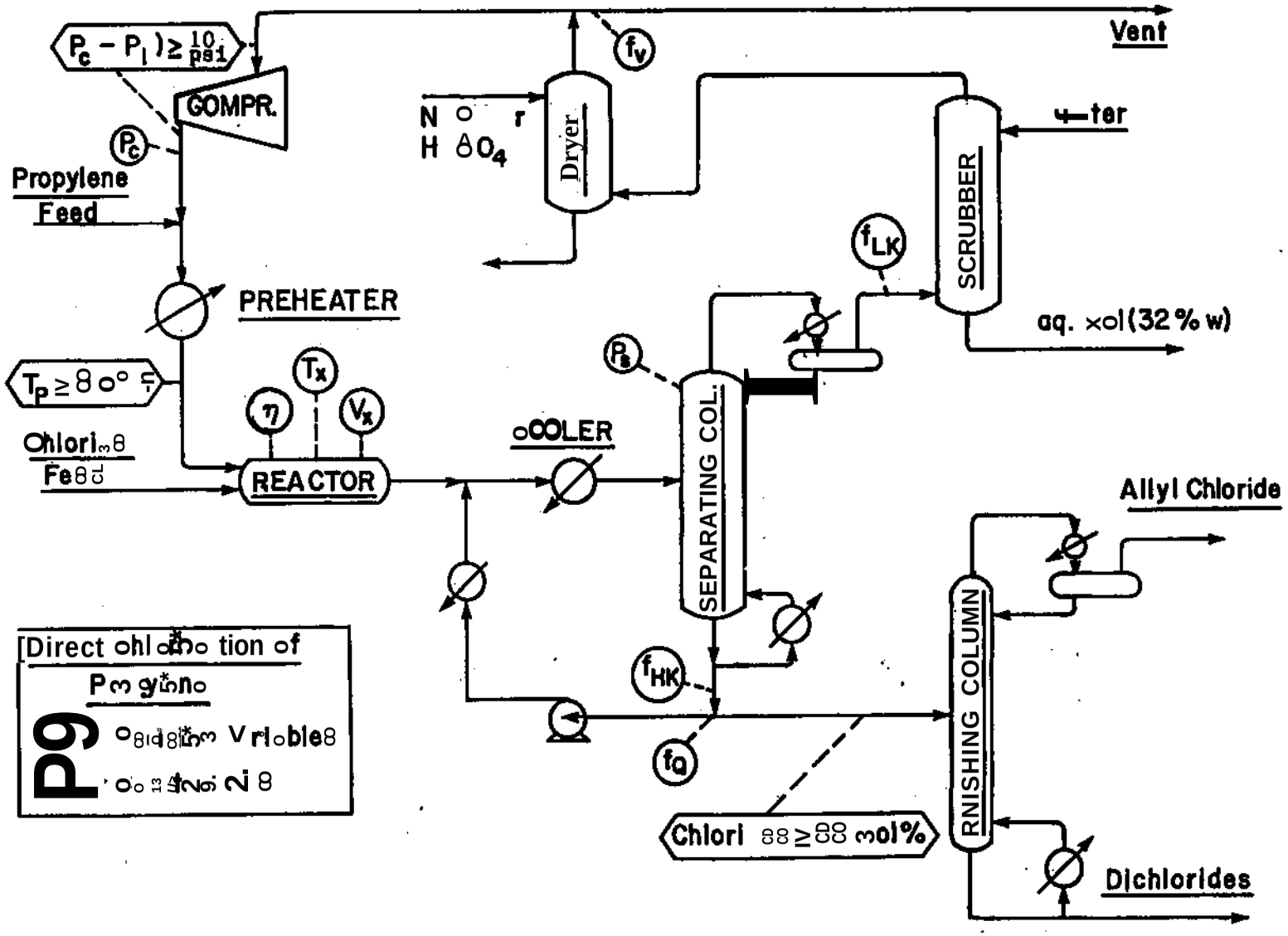

[Direct chlorination of Propylene

P9 Variable