Carnegie Mellon University
Research Showcase @ CMU

Department of Chemical Engineering | Carnegie Institute of Technology

1987

Retrofit design of processes

Ignacio E. Grossmann
Carnegie Mellon University

Arthur W. Westerberg

Lorenz T. Biegler

Carnegie Mellon University.Engineering Design Research Center.

Follow this and additional works at: http://repository.cmu.edu/cheme

Recommended Citation
.

This Technical Report is brought to you for free and open access by the Carnegie Institute of Technology at Research Showcase @ CMU. It has been accepted for inclusion in Department of Chemical Engineering by an authorized administrator of Research Showcase @ CMU. For more information, please contact research-showcase@andrew.cmu.edu.

NOTICE WARNING CONCERNING COPYRIGHT RESTRICTIONS:
The copyright law of the United States (title 17, U.S. Code) governs the making of photocopies or other reproductions of copyrighted material. Any copying of this document without permission of its author may be prohibited by law.

Retrofit Design of Processes

by

I. E. Grossmann, A. W. Westerberg, and L. T. Biegler

EDRC-06-30-87 ^

Retrofit Design of Processes

Ignacio E. Grossmann

Arthur W. Westerberg

Lorenz T. Biegler

Department of Chemical Engineering
and the
Engineering Design Research Center
Carnegie-Mellon University
Pittsburgh, PA 15213

March, 1987

University Libraries
Carnegie Mellon University
Pittsburgh, Pennsylvania 15213

Support for this work has been provided by DOE Grant No.

DE-FG-02-85ER13396.

Abstract

Retrofit design precludes the decomposition usually adopted in grassroots design where process decisions are made first to be followed by equipment decisions. The lack of this decomposition forces a potentially explosive growth in the search space. Retrofit design also requires models that can rate existing equipment for proper analysis; these models are much more complex. This paper reviews the as yet sparsely populated process retrofit literature where most work is for redesigning heat recovery systems. We see evolutionary strategies that reflect ones inability to explore all alternatives. It concludes with an assessment of where we are and ideas for future developments.

Introduction

A major portion of the chemical industry has matured. Most chemical plants were built at a time when profit margins could be kept large and thus were not typically designed to be the most efficient from an energy and raw material perspective. However, competitive pressures from Japan and European countries, as well as from developing countries, have greatly increased the need for more efficient processes. Consequently, process industries feel an increasing need to redesign and modernize existing facilities. Over the last five years, it has been estimated that 70-80% of all process design projects have dealt with the redesign, i.e., retrofit design, of existing facilities.

One can expect that optimal plant redesign will play an increasingly important role in the future in response to uncertainties in the availability and prices of feedstocks and energy, as well as the market for commodity chemicals. Also, the successful commercialization of specialty chemicals will require the ability to redesign processes quickly to respond to changes in new technology and to the short life cycle of new products. Thus retrofit design constitutes a very important problem in the area of process operations.

Only in the last few years has any significant design research taken place to deal with the retrofit problem in a systematic way. Clearly the motivation for this problem is provided by the industrial environment, but development of retrofit design strategies is also an interesting and difficult problem for academic research. In this paper we will define the retrofit problem and review recent research that addresses it. Moreover, we will stress why this problem is more difficult than the design of new processes (its grassroots counterpart). Specifically, we highlight some problem features that are currently very difficult to address simply by applying grassroots design strategies. Finally, we will present a framework for addressing general classes of retrofit problems in a systematic way.

The paper is organized to deal with a number of retrofit *issues.* First, it will be shown by example that retrofit problems require a far greater number of alternatives than the grassroots problem. This is due to the need to evaluate and use existing equipment. Next, we show that straightforward applications of grassroots strategies will usually

lead to suboptimal retrofit designs. This leads us to consider in detail the following factors for developing strategies:

- search strategies that deal with the combinatorial retrofit problem
- accurate evaluation of existing equipment
- consideration of different and, often, multiple objectives for performing the retrofit problem

As part of this discussion specialized strategies for retrofits, i.e. to improve economics, to conserve energy and to improve flexibility will be reviewed. This annotated review will provide the basis for a general framework for dealing with a wide class of retrofit problems. Finally, some guidelines and concepts that relate to a practical realization of this framework will be discussed.

Nature of the Retrofit Problem

The decision to redesign a process can arise for any of several reasons, such as the following.

- To increase the throughput of the current process by debottlenecking it
- To process a new feedstock.
- To improve the quality of the product
- To improve the economics by the use of less energy per unit of production
- To increase the conversion of feedstocks.
- To improve operability of the process (flexibility, controllability).
- To improve process safety.
- To reduce the environmental impact of an existing process.

In order of increasing cost generally, the following indicate the types of modifications which can be used in retrofit design.

- Alter the operating conditions of the process. Here no process equipment changes are implemented so this form of change is obviously the least costly in terms on investment
- Keep the same equipment but alter the piping which connects it The equipment may be used for a new purpose. For example, relative to the cost of purchasing a new column, repiping typically incurs very modest costs.
- Keep the process flowsheet intact but change the equipment sizing, sometimes in ways that the external physical dimensions of the equipment are not altered. Such changes could include putting new tube bundles inside of existing heat exchanger shells, closer packed trays or even packing inside of columns. Packing could be very expensive but cost effective if it is the only change needed.
- Add new equipment.

While the above operations indicate the changes one can consider, each process offers it own limitations on what really can be done. Building codes can be a problem. In some states if over 60% of the equipment on a rack of equipment is changed, then the rack has to conform to the latest building code regulations whereas, if the changes

are less, the old regulations can be used. The cost of strengthening the equipment rack obviously changes the economics of some of the possible changes. In other cases what should have been a simple repiping is virtually impossible as the pipe rack can hold no more runs. Changes could also increase the physical size of the equipment which the current space cannot tolerate if the equipment is to be installed or maintained.

Comparison of Grassroot and Retrofit Design

Currently, redesign problems are tackled only on an ad hoc basis using tools that were developed specifically for "grassroots" designs, i.e., the design of new processes. However, as we shall now expose, there is a fundamental difference between these two design paradigms. Grassroots designs have many more degrees of freedom in the preliminary phase, and thus allows for a useful decomposition of effort; i.e, first the basic structure of the process is established and sizing and selection of suitable equipment follows. In retrofit design, modification of structure and equipment occurs simultaneously, as the economics of retrofit design dictate the reuse of much of the existing equipment

The models required for analyzing a design are also fundamentally different In grassroots design, one can use models that characterize nominal behavior of the equipment types, whereas in retrofit design the models must indicate the performance of existing pieces of equipment which might be run far from the nominal conditions for which they were designed. These "rating" models are much more complex models.

The Size of Retrofit Problems

Before reviewing strategies for retrofit design it would first be useful to appreciate the number of alternatives for retrofit problems on a type of class of problems already well studied in grassroots design. Here we consider one of the most frequently considered problems in separation system design. A single mixture of N components is to be separated into N essentially pure component products using a sequence of distillation columns. Each column in the sequence has only two products (a distillate and a bottoms) which are the result of sharply splitting the column feed between two adjacent key components. Thus the light key and all species lighter than it exit in the distillate and the heavy key and all species heavier than it exit in the bottoms. No components distribute between the top and bottom products.

Thompson and King (1972) showed that the number of alternative sequences, S(N), possible for this problem is given by the formula:

$$S(N) = \frac{(2(N-1))!}{M\ (\mathrm{AM})!} \tag{1}$$

Each sequence is made up of N-1 columns. Each column accomplishes a different task such as splitting A

from BCD or splitting B from CD or splitting C from D. The number of different separation tasks, T(N), grows according to **the formula:**

$$T(N) = \frac{(N-1)(N)(N+1)}{6} \tag{2}$$

The first three columns of Table give the growth of these numbers versus N. As N gets large, the number of sequences grows factorially in N and thus much more rapidly than the number of tasks which is growing as the cube of N.

Table 1: Growth of Tasks and Sequences with Number of Components

N	T(N)	S(N)	TR(N,0)	SR(N,0)	TR(N,1)	SR(N,1)
2	1	1	1	1	4	4
3	4	2	8	4	36	36
4	10	5	30	30	160	480
5	20	14	80	336	500	8,400
6	35	42	165	5,040	1,260	60,480
7	56	132	336	95,040	2,744	4,656,960

If we generate the number of alternatives possible when considering retrofit design, we begin to see clearly why it is a much harder problem than grassroots design. Here we follow the line of thinking of Neil Carlberg, a PhD student working with Westerberg on retrofit design at Carnegie Mellon University.

Suppose that we wish to run the process with an increased throughput that exceeds the capacity of the current sequence. We might first **look** for an alternative sequence which uses the existing columns and which will accommodate the **larger** throughput An approach would be to test each of the N-l existing columns against the T(N) alternative separation tasks possible for the problem. This test will search over the allowable operating ranges set by weeping, flooding and materials constraints for the column pressures, reflux ratios and possibly number of stages (if we allow the column internals to be replaced) to discover if the task can be accomplished in the column.

The number of tasks considered is N-l times that for the grassroots design. The effort to analyze each task is also much larger as it involves a search over the pressure, reflux ratio and number of stages to determine feasibility of the task within the column. For each sequence of tasks, we can assign one of N-l columns to the first task, one of

the remaining N-2 to the second and so forth, giving (N-1)! times as many sequences as when we did not identify the equipment to be used with each task.

The number of tasks to examine and the number of different sequences that can be sketched are thus given by:

$$TR(N,0) = (N-1)\times T(N) \tag{3}$$

$$SR(N,0) = (N-1)!\times S(N)$$

where TR(N,0) and SR(N,0) are the maximum total number of tasks and sequences to be examined when redesigning with zero new columns used in the redesign.

If no sequence will accommodate the new throughput, then one will have to purchase some new equipment. We could first consider designs that have one new column in them while using the existing equipment to accomplish the rest of the separation requirements. With a spare column available, we can consider accomplishing one of the tasks using two columns rather than one. This task could use the two columns in parallel or in series. The two columns could be two existing pieces of equipment or one existing and one new.

Here the maximum total number of tasks and sequences which have to be examined can be shown to be:

$$TR(N,1) = N^2\times T(N) \tag{4}$$

$$SR(N,1) = N\times N!S(N) \tag{5}$$

The alternatives counted by these numbers include those for the earlier searches, i.e., for TR(N,0) and SR(N,0).

The last four columns of Table shows the explosive increase in the potential size for the retrofit design problem. Clearly the requirement to consider both the tasks and the existing equipment alternatives within which to accomplish them changes the size of the potential search problem enormously.

There are more options than we have allowed here. For example, nonsharp splitting of the feed into mixed products, the use of bypassing, the heat integration of columns and so forth obviously increase the number of available options for redesign significantly over the number shown.

Fortunately actual problems will not grow to their maximum size as many of the existing columns will not accommodate the required tasks. Planning the search strategically can reduce the effort for evaluating tasks too. For example one can use simple heuristics to eliminate columns obviously not suited for many of the tasks. Only where the heuristics cannot rule out assignments would more detailed evaluations be needed. Also if the task A/B cannot be accomplished within a column, then it might be possible in some instances to conclude without further

testing that neither can A/BC nor A/BCD, etc. With fewer tasks available, the number of sequences drops substantially too.

However, we see there is potential for enormous problems to result even when 95% of them might be quickly eliminated from consideration.

An Example of Retrofit Design

To further illustrate the differences between grassroots design and retrofit design, we now consider a small retrofit problem for energy recovery.

As illustrated in Fig. 1.a, an existing compressor has an aftercooler which is cooled by cooling water. In the same process we find a distillation column reboiler being heated by steam. The annual cost for cooling water for the compressor aftercooler and steam for the column reboiler is $84,400/yr.

Figure 1: Example Retrofit Design Problem. (a) Original flowsheet with non-integrated aftercooler and reboiler. (b) Redesign with two new exchangers. (c) Redesign with new reboiler in parallel.

A grassroots analysis using Hohmann's (1971) composite curves suggests the heating source and heating sink can be integrated to reduce the steam requirement entirely, leaving a cooling water utility cost of $3960/yr. However, the existing exchangers have insufficient area to accomplish the integration. Scrapping the existing exchangers and purchasing new exchangers (see Fig. 1.b) gives an added equipment cost of $108,040/yr for a total annualized cost that is 33% higher than the existing system.

Several alternative configurations exist to reuse the existing exchangers. One of the possible configurations places, shown in Fig. 1.c, places the existing reboiler in parallel with a new exchanger to effect the integration. The aftercooler can also be reused for removing the net excess heat using cooling water but must run with an increased flow of cooling water to increase the driving force and improve the transfer coefficient so the needed cooling can occur. The cooling water costs increase to $5280/yr, but the extra heat exchanger needed adds only another $44,320/yr which provides a solution that is 41% less than the cost of the existing system.

If a grassroots design were being done for this problem, one would have determined the minimum utility requirement and then designed the exchanger network to accomplish it. That design effort, however, was just the starting point for a redesign problem. Considerably more work was required to determine which of the alternatives

which use existing equipment is the best Many alternative equipment configurations can readily be generated to reuse the existing equipmenL To include this existing equipment in the design requires that one analyze, typically with much more complex models, equipment performance while still considering the design configuration. Here also one had to appreciate that increasing the cooling water flow would provide the needed temperature driving force to allow the reuse of one of the exchangers.

General Strategies and Tools for Retrofit Design

Due to the open-ended nature of retrofit design, a variety of approaches have been proposed to tackle these problems, although most approaches are dependent on particular applications (e.g. debottlenecking, retrofitting heat exchanger networks). Before presenting a review of the relevant work, it is useful to present first a general classification of different strategies and tools for retrofit design.

Evolution and optimization are two major search modes for determining design modifications. The evolutionary strategy has been most commonly used Typically it is driven by the user who, through the use of targets, bounds, insights and/or inspection, proposes design modifications which are then evaluated and verified through simulation. The obvious appeal of evolutionary search is that the existing system is the natural starting point for the search. Also, the user can influence and evaluate more readily the practical suitability of a process modification. On the other hand, the evolutionary approach may involve a great deal of trial and error in proposing and analyzing alternatives.

The primary use of the optimization strategy has been to determine optimal changes in operating conditions or sizing. Very little work has been done on the use of optimization for predicting required structural modifications. It is not trivial to embed a-priori all of the relevant discrete process modifications for a retrofit, as well as appropriate physical performance models, into a mathematical programming formulation. When this goal can be accomplished, however, it provides a convenient framework for handling the modeling and combinatorial aspect of a retrofit problem. Of course, the optimization approach can also be used within an evolutionary strategy. In principle it is also possible to incorporate some of the targets or insights into optimization problems and thus suggest and simplify alternatives that have to be embedded.

A third approach to discovering design modifications attempts to use existing grassroots design methodology in the retrofit problem. First one removes part of the existing structure and mentally puts it to the side. Next one designs in the missing parts as if one were designing with all new equipmenL Finally the equipment needed to implement the "new" design is compared to that available and placed in an ad hoc manner into the flowsheet where it looks as if it will fit This approach underlies several of the strategies we shall review shortly.

Some of the basic tools for retrofit design that have been used within the two above strategies include:

1. Targets and bounds that provide guidelines on the potential for improvements in the existing plant
2. Physical insights that can help to identify bottlenecks and undesirable features in a design or suggest possible modifications.
3. Performance measures to assess economics, flexibility, controllability, safety, etc. of the existing design and its proposed modifications.
4. Sensitivity analyses to identify dominant variables and the potential improvement of proposed modifications.
5. Short-cut design models to predict sizing modifications quickly.
6. Rigorous simulation models to verify the feasibility of the proposed retrofits.
7. Optimization techniques for handling discrete and continuous decisions.
8. Interactive computer environments with graphic displays.

The variety of the above tools indicates the complexity involved in retrofit design problems and the fact that no general methodology is yet available. Also, an important limitation in some of the above tools is that they were devised for grassroots problems. Before we discuss in detail how these tools could be extended or modified for retrofit design, it is illustrative to see how they have been used in several areas of application and incorporated into current retrofit design strategies.

Review of Previous Work

Improving Economics in Process Flowsheets

A main objective for process retrofits is to improve process economics, either through increased production or reduced operating costs. This objective includes the important problem of reducing energy consumption which has formed the basis of most retrofit studies. A number of retrofitting studies have been reported in the chemical engineering literature, but most are ad hoc approaches tailored to individual processes that serve merely as case studies. Among these are industrial studies relating to the manufacture of ethylene (Buffenoir, 1982), resid cracking (Barger and Miller, 1983), ammonia synthesis (James and Stokes, 1984), and the production of hydrogen (Bergens and Udengaard, 1983).

Studies on energy conservation starting from "energy audit* concepts (Elshout, 1982, Johnnie and Klooster, 1984) have defined this problem in a general way without reference to more detailed solution strategies. Steinmeyer (1984) presents an interesting report on barriers to retrofit as well as some simple misconceptions from an industrial perspective. He also points out the importance of process simulation for retrofits. While these studies describe retrofit projects that have payout times of a year or less, none of these presents a systematic strategy for addressing and solving general retrofit problems. Indeed, most of these studies only outline ad hoc strategies on specific

processes.

To date, perhaps the broadest approach to handling the retrofit problem is given by Douglas and coworkers (Douglas, 1987, Fisher, Douglas and Doherty, 1985). They consider the retrofit task to be one of making minor modifications in the interconnections of process equipment Thus many of the tools developed for new design will also be useful here. The strategy is posed in terms of a hierarchy with the following annotated steps:

1. Estimate an upper bound on the incentive for retrofitting by preparing an operating cost diagram and examining the magnitude of these costs.
2. Estimate the incentive for replacing the existing plant with an identical system. Coming up with this flowsheet generates process alternatives for retrofitting the existing process. This task also represents the largest capital expenditure for a retrofit
3. Estimate the incentive for replacing the existing plant with the best process alternative. With this step one encounters new process alternatives that can be considered in the retrofit strategy.
4. Estimate the incremental investment cost and operating cost savings associated with proposed changes. This step is done while examining and optimizing trade-offs within the following substeps.
    a. Eliminate process heat exchangers. This step decouples the mass flows from the heat flows for the process.
    b. Identify the significant operating variables for optimization.
    c. Identify the equipment that constrains the significant operating variables.
    d. Remove the (binding) equipment constraints by adding excess capacity until the incremental, annualized capital cost balances the savings in operating costs. This step corresponds to the familiar debottlenecking step.
    e. Energy integrate the process after the optimization in parts b) and d). Iteration will occur in these steps.
    f. Retrofit the heat exchanger network by using existing exchangers to satisfy the energy integration profile in part e).
5. Refine the retrofit calculations, if justified.

The above steps are rather general and allow for a great deal of flexibility in the detail of process models or the sophistication of the optimization strategy. Douglas (1987) advocates the use of simple shortcut models for estimation of incentives for retrofit and evaluation of trade-off curves. Moreover, optimization is done simply by examination of trade-off curves for a few key operating variables. With this approach, the likelihood of targetting successful retrofit alternatives improves because obviously poor alternatives are rejected quickly. Also the last step for refinement of retrofit calculations leaves a number of options open. Douglas (1987) considers incorporating more operating variables into the optimization problem and of other retrofit alternatives at this stage. However, one could also introduce more rigorous process models or more accurate optimization strategies as well.

This strategy was applied to a Hydrodealkylation Process taken from McKetta. By generating only a few alternatives and performing simple shortcut calculations and optimizations, a savings of Sl,140,000/yr was realized

in operating cost with a capital investment of only S290,000/yr. Thus this general strategy is capable of generating retrofits that are competitive with the ad hoc strategies cited above.

However, the drawbacks of this strategy also lie in the generality within the steps of the procedure. One serious concern is the treatment of the retrofit problem in a manner similar to the grassroots problem. Consequently, the using of existing equipment is not considered in a systematic way and varies with the alternatives proposed for a specific process. Also, many of the constraints arising from existing equipment cannot be treated through simple shortcut models. In fact, even the quantitative definition of limiting constraints in step 4c. may not be an easy task.

Moreover, the generation of alternatives implied in steps 2 and 3 can be an explosively combinatorial task as seen above even if only the existing unit operations are considered. Finally, the most immediate concern is that of decoupling the energy integration retrofit from the rest of the process, thereby requiring iteration between steps 4b through 4e (Terrill and Douglas, 1987). In addition, steps 4e and 4f are difficult problems even for moderately sized processes. Thus, in performing more refined and accurate retrofit studies, many of the steps in the Douglas (1985) hierarchy become formidable tasks.

Nevertheless, this approach provides a useful starting point for highlighting the main points of the retrofit problem as well as defining a useful tool for quickly screening retrofit alternatives. The drawbacks to this retrofit approach will also be mentioned later in outlining a proposed retrofit strategy. In the next section we deal more specifically with the retrofit of heat integration systems.

Heat Integration

The grassroots synthesis of heat exchanger networks has received the most attention in the literature of any synthesis problem. In a recent review, Gundersen and Naess (1987) cite almost 200 references on this topic. Not unexpectedly this topic is also the area where more work has been reported for retrofit design, although the corresponding number of publications is still rather modest

The prediction of targets for the minimum utility consumption, minimum number of units (Hohmann,1971; Linnhoff and Flower, 1978) and minimum area (Townsend and Linnhoff, 1984), as well as the insights on the pinch point (Umeda et al, 1978), have clearly played a very relevant role in the development of grassroots synthesis techniques for heat exchanger networks (see Gundersen and Naess, 1987). For retrofit design however, their extension and application has not been entirely straightforward as we will examine in the procedures that have been proposed by Jones et al. (1986), Tjoe and Linnhoff (1986) and Saboo et al (1986).

For convenience in the presentation we describe first the methodology by Tjoe and Linnhoff (1986). In this

approach an approximate payout target for retrofit is developed prior to the redesign and followed by an evolutionary procedure that relies on physical insight and inspection.

The first step in this strategy consists of establishing a target for an economic energy recovery level that is associated with a minimum temperature approach for heat integration (HRAT) (Colbert, 1982). The basic idea behind this retrofit target is illustrated in Figs. 2 and 3. By calculating at each value of HRAT the associated minimum utility consumption and the minimum area target, one can develop the curve G that relates the grassroots area for different energy requirements. Assume now that the existing design lies at point E where there is an excess area for the current energy consumption. The ratio of the area at E with the minimum area at that energy level is denoted by a. By multiplying the curve G by a one obtains the curve, R, which is an *estimation* of the area needed for the retrofit design as a function of the energy requirement.

Figure 2: Grassroots and estimated retrofit area as a function of energy requirement

Figure 3: Energy target for specified payout.

By estimating the investment cost of the additional area needed for lower energy requirements based on Fig. 2, one can develop a curve of energy savings (S) versus capital investment shown in Fig. 3. This curve starts at the origin and can be expected to have a concave form due to the diminishing return in the savings for additional investment If a payout (investment/annual savings) is specified for the retrofit project (e.g. 2 years), this can be represented by the straight line in Fig. 3 whose slope is the inverse of the payout The intersection of the line with the curve would then indicate an approximate target for the energy requirement, which in turn can be associated to the HRAT value for the retrofit design.

Having established the value of HRAT and its associated energy requirement, the following evolutionary procedure is used:

1. Represent The existing network through the grid diagram for the selected value of HRAT (e.g., see

Fig. 4).

3. **Figure 4:** Identification of matches crossing the punch temperature in grid diagram.

3. Eliminate the matches that cross the poinch point (1 and 2 in Fig. 4) based on the physical insight that no heat should be exchanged across the pinch in order to maintain the desired energy requirement.
4. Develop by inspection an initial retrofit design by trying to reuse the exchangers removed in step 2.
5. Evolve manually to a final redesign by improving compatibility with the existing network via heat-load loops and paths (Linnhoff et al, 1982), and by reusing area of existing exchangers as much as possible.

Applications of preliminary versions of this procedure to industrial problems have been reported in Linnhoff and Vredeveld (1984).

In the approach suggested by Jones et al. (1986) an evolutionary strategy is used that relies on the simulation, nonlinear optimization and grassroots synthesis capabilities of HEXTRAN, as well as on the development of an approximate payout target. Their procedure can be summarized as follows:

1. The operation of the existing network is optimized, particularly when split streams are involved. If the improvements are close to the absolute minimum utility target (HRAT=0), there is no need to consider any modifications in the network.
2. The sensitivity of the payout to area additions in each exchanger is examined. This step is performed by reoptimizing the network for small increments in the area of each exchanger and calculating their individual payouts. Area is then added to those exchangers whose payout lies below the specified value (e.g. 2yrs) through optimization. Here again no further modifications are considered if one comes close to the absolute minimum utility target.
3. A payout target is developed to identify the HRAT value for the retrofit. For each examined value of HRAT the approach temperature of the exchangers, EMAT, is optimized. A similar plot as in Fig. 3 is generated. However in contrast to Tjoe and Linnhoff, the plot in Fig. 2 is not used, but instead grassroots networks are synthesized for different values of HRAT and EMAT. The capital investment is estimated from newly installed exchangers in these networks.
4. An initial retrofit network is derived by inspection from the differences with the grassroots design obtained with the HRAT and EMAT value obtained in step 3. The final design is evolved by simulating successive modifications in the network.

Finally, Saboo et al (1986) have outlined an evolutionary strategy that relies on nonlinear optimization, constrained MILP synthesis and feasibility evaluation capabilities of RESHEX. Their procedure does not consider explicitly economic data, and generates a number of successive retrofit design alternatives. Their procedure can be summarized as follows:

1. The targets for minimum utility and minimum area are evaluated for different values of HRAT. The absolute minimum utility target (HRAT=0) is also evaluated for the existing network *structure.* This target can indicate if additions of area to the existing exchangers will be sufficient to improve the energy recovery.
2. Additions of area are considered through optimization at different energy requirements. The resulting total areas are compared to the grassroots target areas to identify possible repiping of existing exchangers.
3. For the different repiping alternatives, area additions are calculated through optimization. The alternative leading to minimum utility consumption is selected.
4. When a specified minimum utility consumption cannot be accomplished by addition of area or repiping of the present structure, new network configurations are synthesized. This is performed through the successive solution of the NOLP transshipment model where constraints for avoiding stream splitting and limiting the number of units are included so as to obtain a similar structure as the existing network. Finally, the addition of areas is minimized through optimization.

From the above retrofit procedures, it is clear that they are evolutionary in nature and that they make use of targets and tools for grassroots design, although some of them have been extended or modified to the retrofit problem. Another recent tool that has been extended for retrofit is the MILP assignment/transshipment model of Yee and Grossmann (1987) for predicting the fewest structural modifications in a network.

In addition to the retrofit of heat exchanger networks, some of the insights on the pinch and the utility target have been applied as tools for making process modifications in existing plants to improve heat integration. Based on the T-Q diagram for the composite hot and cold streams in a process, Umeda et al (1979a,b) considered the effect of changing pressure and temperature levels in process streams so as to modify the location of the pinch point to enhance heat integration. This idea was extended by Linnhoff and Vredeveld (1984) through the plus/minus principle in which heat is added to the heat sink above the pinch, and removed from the heat source below the pinch. This insight has been applied to the integration of distillation columns with the overall process (Linnhoff et al, 1983) and to the appropriate placement of heat pumps and heat engines (Townsend and Linnhoff, 1983).

As for the interactions of the retrofit of the heat exchanger network with the utility system (steam and power plant), the Grand Composite Curve (Linnhoff et al., 1982) and the Heat and Demand Supply Diagram (Itoh et al, 1982) have been used to identify the required level of utilities and options for steam generation. To consider the impact of the potential excess of steam at various pressure levels in the utility system on the minimum utility target, Westerberg (1983) and Doldan et al (1985) proposed two optimization models. Westerberg (1983) referencing the Doldan et al work (which was presented in Argentina in 1983), described a Heat Path Diagram for optimizing, through an LP, the heat flows between the process and the utility system. Doldan et al (1985) is a more general formulation and shows how to predict the minimum utility target by accounting explicitly for the operation of the existing structure of the utility system through an NLP formulation.

Batch Processes

While the most common incentives for the retrofit of large-scale commodity plants lies in the reduction of operating costs **and energy** consumption, in low-volume batch processes for specialty chemicals it usually lies in the need to expand capacity to accommodate increased demands or manufacture of new products. Very little work has been reported in the literature on such retrofit problems since most of the work in batch design has concentrated on grassroots problems (e.g. see Klossner and Rippin (1984) and Biegler et al (1987) for a review). We will review here a mixed-integer nonlinear programming (MINLP) approach for discrete and continuous optimization suggested by Vaselenak et al (1986) for retrofitting multiproduct batch plants, as well as the potential use of simplified methods by Yeh and Reklaitis (198S) for retrofit

The problem considered by Vaselenak et al (1986) is as follows. For an existing multiproduct batch plant, new upper limits for production targets and new selling prices are specified for a given set of products. The problem then consists in determining the optimal addition of equipment (number, location, type and sizes) and the production levels of the different products that will maximize profit Note that because the production targets are specified as upper limits, possible solutions include not doing any modification, limited additions for levels lower than the production targets, or additions to fulfil the new targets. Therefore, in general there is a very large number of candidate alternatives for this optimal retrofit design.

Vaselenak et al. (1987) assumed that all products follow the same processing sequence through different stages. Processing times are fixed and there is no intermediate storage. Also, for scheduling, single product campaigns are considered that can be characterized by cycle times for each product (see Sparrow et al, 1975).

As for the addition of new equipment at each processing stage, two options were considered. One option is to place the equipment in parallel but operate out of phase to decrease the cycle times. The other option is to place the equipment in parallel but operating in phase to allow an increase in the size of the batches. By considering the two possible options at each stage, one can develop a superstructure such as the one shown in Fig. 5. The existing batch plant in this figure involves four stages, having one unit at stages 1,2 and 4, and two parallel units in stage 3.

Figure 5: Superstructure for equipment addition in multiproduct batch plant

Vaselenak et al (1986) formulated this retrofit problem as an MINLP which involves 0-1 variables for the

potential additions (y^B, y^c) in Fig. 5, and continuous variables for the equipment volumes, cycle times and number and sizes **of batches. The MINLP** is solved with the outer-approximation algorithm of Duran and Grossmann (1986a,b), **with special** provisions in the master problem to ensure that the global optimum solution is obtained. Their results show **that** typically only 3 to 5 alternatives have to be analyzed and optimized to obtain the optimal retrofit solution.

Yeh and Reklaitis (1985) have developed simplified procedures for the optimal sizing of multiproduct batch plants with semi-continuous equipment and fixed number of parallel units. These procedures yield very good approximations and do not require the use of NLP techniques. The proposed procedures can be used to examine quickly different retrofit alternatives for expanding the capacity of the plant

Improving Flexibility

One of the other common objectives in retrofit design is to increase the flexibility of chemical processes so as to ensure feasible steady-state operation for a wider range of operating conditions, e.g. variations in feedstock and product demand, uncertainties in the process conditions (see Grossmann and Morari, 1984). The tools **that have** been proposed for this purpose include flexibility measures, sensitivity analysis and optimization formulations to improve flexibility. A significant number of these have been directed to heat exchanger networks.

For general chemical processes, Swaney and Grossmann (1985a) proposed an index of flexibility, F, that provides a measure of the feasible region of operation. This measure is relative to a nominal operating point and to expected deviations in the uncertain parameters. Furthermore, it also anticipates the corrective actions that can be taken during operation to compensate for the effect of the uncertainties. Geometrically this index inscribes the largest rectangle T(F) within the feasible region of operation as seen in Fig. 6. By determining this index one can determine lower and upper bounds for independent or correlated variations of the uncertain parameters in the feasible region of operation. More important, however, is that the determination of this index also provides information on the *critical parameter point(s)* that limit the flexibility in a design (e.g. point C in Fig. 6). These critical points physically correspond to bottlenecks that prevent the existing design from having a greater flexibility.

Figure 6: Rectangle T(F) corresponding to index of flexibility F with reference to rectangle T for uncertain parameters 8_P 9_2.

By determining the critical points) for flexibility with the algorithms described in Swaney and Grossmann

(1985b) or Grossmann and Floudas (1986), it is possible to evaluate the potential increase of flexibility, F, with proposed changes in the design, as given by the equation

$$\frac{\partial F}{\partial d_i} = -\sum_j \lambda_j \frac{\partial f_j}{\partial d_i} \tag{6}$$

where d_i corresponds to the i'th design variable, fj corresponds to the j'th inequality constraint that defines feasible operation and \>$_j$ is the Kuhn-Tucker multiplier of constraint j associated with the maximization of the scaled parameter deviation from the nominal to the critical point

From equation 6, which is a sensitivity measure, it follows that a zero-value implies no local improvement for flexibility with a change in the design variable d_i. On the other hand, the variable d_i with the largest positive sensitivity measure indicates the design change with largest potential increase of flexibility. Also, constraints that limit flexibility correspond to the ones with non-zero multipliers. Thus, eqn. 6 can provide some guidance on which design variables to change in a retrofit project to increase the flexibility. However, it has the common limitations of sensitivity analysis procedures. >

Recently, Pistikopoulos and Grossmann (1987) have proposed an explicit mathematical formulation for determining the cheapest retrofit design modification to increase the flexibility to a specified target value, FV Assuming a linear process model with fixed-cost charges for the modifications, the formulation corresponds to the MILP given by

$$\lim_{yM} \; c^T y + \$^T M, \tag{7}$$

$$SJ. \quad \delta^k \geq F^t$$

$$\delta^k = \delta_0^k + \sum_{i=1}^{r} \sigma_i^k \Delta d_i \;, \; k = 1, n_{AS}$$

$$-U_i^- y_i \leq \Delta d_i \leq U_i^+ y_i \,, \; y_i = 0,1 \;\; i = 1,r$$

where Ad_4 are the design changes associated with 0-1 variables y_4; U_L\ U^ are bounds; c and p cost coefficients for fixed-charge cost model; 5* are the scaled deviations of each of the n_{AS} limiting active set of constraints; a^ are linear sensitivity coefficients that can be computed apriori for potential constraints which limit flexibility.

The above formulation can be extended also to predict structural modifications provided a superstructure of retrofit design modifications is postulated. Furthermore, when only sizing changes are considered , by using range and dual analysis, one can easily derive from (6) the trade-off curve of retrofit cost versus the flexibility targeL A

typical curve is shown in Fig. 7, which as expected is piecewise linear with increasing slopes that reflect the increased cost at higher flexibility.

Figure 7: Trade-off curve of cast vs. flexibility target for existing design with flexibility F_E.

For the case of heat exchanger networks, Saboo et al (1985) have proposed a resilience index, RI, that physically corresponds to the largest *individual* load deviation of a process stream that can be tolerated in a network for feasible operation. As opposed to the flexibility index of Swaney and Grossmann, the resilience index corresponds geometrically to the largest diamond or simplex S(RI) that can be inscribed within the region of operation (see Fig. 8). This measure defines different critical points (e.g. point C in Fig. 8), but similar sensitivity measures, guidelines, and identification of bottlenecks as in eqn. 6 can be derived for the retrofit design modifications. An extensive review of the specific methods developed by Morari and co-workers can be found in Colberg and Morari (1986).

Figure 8: Simplex S(RI) corresponding to resilience index RI for load disturbances $l_v l_2$-

Saboo and Morari (1984) have also shown through an interesting example that flowrate variations in a network can produce non-extreme critical points due to the underlying nonconvexity of the feasible region. To identify this situation, as well as changes in pinch points which may produce similar phenomena, Calandranis and Stephanopoulos (1986) have developed a number of analytical methods. These can provide guidance to the designer on how to retrofit a network with improved flexibility and that does not contain non-exteme critical points. These methods have been implemented on a Symbolics 3640 computer using a knowledge-based system that is supported by graphics for interactive use.

Finally, Kotjabasakis and Linnhoff (1986) have proposed a retrofit strategy for determining cost-effective modifications that improve the flexibility in heat exchanger networks. The proposed procedure consists first of the derivation of sensitivity tables to study the internal and target temperature variations with respect to changes in

supply temperatures, flowrates and effective UA values for the heat exchangers. These tables, which are based on the idea of "downstream paths" of individual parameter variations in a network (see Linnhoff and Kotjabasakis, 1984), represent approximate solutions to the different simulation problems. The sensitivity tables are used to identify possible design modifications to maintain the specified target temperatures. Each alternative modification is costed, and possible relaxations of the target temperature specifications are also considered for possible economic savings.

Assessment of the State of the Art

The previous sections have shown several approaches which have been developed for solving retrofit problems. It also shows quite clearly that the basic paradigm for process retrofits has not yet been established since, in fact, most of the papers are no more than a year old. In general, therefore, one sees a number of deficiencies and areas for future work. First, there is as yet no unified, systematic strategy for dealing with the retrofit problem and, indeed, the greatest progress for retrofits has occurred in heat integration, where the grassroots problem is fairly well understood. Also, few methods have been developed to deal systematically with the explosively combinatorial nature of retrofit problem. One example for batch processes is the MINLP strategy of Vaselenak et al (1986), although this study is a specialized case. Consequently, most current retrofit strategies leave the majority of alternative decisions up to the judgment of the engineer.

In light of this review it is useful now to consider some of the unsolved problems for process retrofits. This will help motivate the final section on future directions and explain a more unified strategy developed therein.

At the flowsheet level, most industrial studies cite the importance of simulation to evaluate proposed retrofits. Moreover, as presented by Douglas (1987), the presence of constraints often pinpoints the need for a retrofit design. However, at this point simulation models for flowsheets are usually inappropriate for modelling existing equipment or expressing operating constraints in an accurate manner. Moreover, flowsheet simulation and optimization needs to be developed in conjunction with changes in flowsheet topology. For example, retrofits in the heat exchanger network require corresponding changes in temperatures and flowrates in the process. A promising strategy for doing this has been developed by Duran and Grossmann (1986c).

With respect to heat integration, the nature of the retrofit problem is still not completely defined. Here the trade-off of considering network repiping (as in Jones et al, 1986) vs. changing heat exchanger area (as in Tjoe and Linnhoff, 1986) is still not resolved. Clearly, the number of alternative retrofits based on this trade-off alone is quite large and a thorough evaluation of each alternative is difficult and time-consuming. Moreover, few approaches consider the detailed performance of existing heat exchangers, such as the internal geometry or pressure drops.

Finally, as mentioned above, the interaction of the HEN with the retrofitted process (Doldan, et al, 1986) or utility system (Westerberg, 1983) has only been considered by a few studies.

In batch processes, retrofit problems are very frequently considered but so far strategies have been developed for only the simplest systems (see, e.g. Vaselenak et al, 1986). Much work remains in dealing with multipurpose plants and scheduling strategies.

Finally, flexibility issues for process retrofits have been rigorously considered for linear systems. Still remaining are how to deal with the redesign of multipurpose units and the stochastic treatment of uncertainties. A related issue is the treatment of controllability using strategies that consider robustness and sensitivity to model errors when planning a process retrofit Also, there are a number of objectives not considered above that are harder to quantify. These include safety, fault tolerance, environmental considerations and so on.

Before outlining a possible strategy to deal with the general retrofit problem, it is useful to reconsider some of the general methodologies for the grassroots synthesis problem and why the retrofit problem frustrates these approaches. As we showed in the first part of this paper, the redesign problem requires us to consider simultaneously the tasks and the existing equipment within which to accomplish them. The combinatorial aspect of the redesign problem is thus explosively larger than for the grassroots design problem. For moderate sized design problems such as separating a seven component mixture into seven pure component products using limited technology, we could potentially have to examine over 4.5 million sequences as opposed to 132 sequences for a grassroots design. It is not surprising that progress is slow in developing a rigorous methodology for this type of problem. One should expect that a complete search over all alternatives will be impossible to consider.

Suppose we wish to minimize a performance index for a process by redesigning it. With complete search likely not possible, we are reduced to finding good redesigns only. The current process gives us an upper bound on the performance index. If a lower bound on the performance index is available, designs found using insights which perform near this lower bound will be our solution. If we cannot establish adequate lower bounds, then we can only seek to find designs better than the current one. We will not know when to stop looking.

The problem of redesigning the heat exchanger network for a process to reduce its energy consumption is the best developed of retrofit design methodology. 'With bounds readily available on the minimum utility use, on the area and on the number of exchanges needed, one can establish a reasonable guess as to the maximum potential savings to be realized. The use of ad hoc methods can usually bring us close to these targets, so even though a complete search is not possible, the designs found will provide nearly the maximum savings. However, these redesigns only allow the heat exchanger network to be altered.

Redesigns which allow the simultaneous consideration of adjusted material flows, heat flows and operating levels for improving an existing process have a much larger potential. While the potential is larger, here little is really available on establishing useful bounds for performance. A grassroots design with zero cost for equipment can provide a lower bound on the utility consumption and with zero utility cost can provide a lower bound for equipment costs, but these bounds are likely far from what is possible to achieve economically. Also, such grassroots designs are not typical ones so we may in fact find it difficult to do these designs well. Therefore, it is clear that a major challenge in the retrofit design problem will lie in the development of rigorous lower bounds which are sufficiently tight to provide a useful stopping criterion in the search for alternatives.

Outline of a Strategy for Retrofit Design

Having examined the state-of-the-art in solving the retrofit task it now becomes useful to consider ways to overcome current limitations and to address more systematic ways of dealing with the general retrofit problem. We will restrict ourselves here to the case where the objective is to retrofit a continuous process to improve its economics at an existing or new process conditions. To do this we consider some general solution steps, describe them in detail and put them in perspective to existing work. In brief, we propose the following steps for dealing with process retrofits.

1. Optimize the process using operating or performance models.
2. Identify a subset of equipment for removal or expansion to improve the process and develop bounding information for retrofit improvement
3. Establish and evaluate alternative configurations using existing equipment where needed

These general steps reflect many of the ideas developed in previous studies and discussed above. In most cases execution of these steps is easier said than done. Consequently, it is necessary to consider each of these steps in detail.

Optimization with performance models

It is readily apparent to anyone simulating an existing process that current flowsheeting packages are more useful for the design of new processes than for the simulation of existing equipment. Consider for example, the simulation of a heat exchanger. For design purposes, one simply specifies feasible inlet and outlet temperatures along with an overall heat transfer coefficient and the required area is easily calculated. Moreover, the mass and energy problem for this process is decoupled from sizing and costing of the exchanger. In fact, some degree of decoupling is present in all flowsheeting models for design. An existing heat exchanger, on the other hand, requires the geometry, the actual area and more complex transport properties to be used in compulation of the energy

balance. Strictly speaking, it requires the formulation and solution of a two-point boundary problem. Here the energy balance, and for other units such as reactors and separators, even the mass balance is strongly coupled to complex relationships involving the characteristics of existing equipment

The important question for evaluation and optimization of existing processes is: *Are existing flowsheeting tools usefulfor evaluating existing equipment or are different models required that need to be builtfrom scratch?*

Clearly for many unit operations, such as reactors, the mass and energy balance are intimately coupled to the unit's geometry and size. Here more detailed models must be considered and careful attention must be paid to efficient yet accurate formulation of these models. Biegler and Cuthrell (1986) and Vasantharajan (1987), for example, have modeled reactor-based flowsheets by writing the differential equations as collocation equations that are handled as equality constraints in a flowsheet optimization problem. For process simulators with an infeasible path optimization capability, this approach allows much easier formulation and more efficient solution than simply incorporating these complex models as user defined modules.

On the other hand, many performance models have mass and energy balance relationships that can be expressed by "design" modules *as long as the unit remains in a specified operating window.* For an existing heat exchanger that satisfies a given heat duty with specified inlet and outlet temperatures, to remain in the operating window requires imposing a constraint for staying within the available area, rather than solving the more complicated two-point boundary value problem to calculate these temperatures. For many existing distillation columns, on the other hand, one could still assume an effective number of equilibrium trays (the mass balance problem) as long as operation remained between flooding and weeping limits on the trays. As shown in Fig. 9, this operating window approach also decouples the mass and energy balance from the characteristics of existing equipment and thus allows available design models to be used. However, an optimization capability is required to ensure process behavior within the operating window constraints. For example, formulation of these inequality constraints can be done easily within Successive Quadratic Programming (SQP).

Figure 9: Performance vs. Design Models.

For large processes, however, this approach requires the optimization algorithm to have special constraint handling features since most of the attributes of performance models are present in the inequality constraints.

Moreover, when some form of SQP decomposition is required (e.g. Locke, Edahl and Westerberg (1983), it is easily seen that, even though dependent variables are eliminated, their bounds still remain as inequality constraints in the SQP quadratic programming step. The presence of this large number of constraints increases the difficulty of solution since determination of active constraints is a combinatorial problem. Recently, Ng and Thompson (1986) have proposed a primal-dual dimension-expanding QP method that handles large numbers of constraints efficiently. Incorporation of this QP strategy into SQP as well as close attention to decomposition thus remains an essential tasks for optimization large process models.

Equipment for Removal or Expansion, Bounding Information for Improving the Process

Once the optimization problem is solved with performance models, one naturally encounters binding constraints that limit any economic improvement for the existing process. This was noted in the Douglas retrofit procedure described above, but here we are able to quantify these constraints through perfonnance models. Through Kuhn-Tucker multipliers obtained at the performance model optimum above, these constraints provide information about process and equipment bottlenecks (e.g. operation at the limit of an operating window) and give a quantitative measure of the sensitivity of the objective function to relaxing these constraints. This information is useful for adding additional capacity or replacing a limiting piece of equipment However, it only begins to address the issue of sensitivity to process changes.

The sensitivity of an economic objective function (such as incremental profit) to changes in the flowsheet or structural sensitivity were first investigated by McGalliard and Westerberg (1972). Here primal and dual bounding information was used to screen suboptimal alternatives quickly before expending the effort for a full process optimization. This strategy is close in philosophy to the heuristic screening strategies of Douglas. It has a theoretical basis but with it a large computational burden. Other strategies for sensitivity analysis deal directly with gradients available from process optimization. Ganesh and Biegler (1987), for example, derived an efficient strategy to evaluate parametric sensitivity of *optimal* flowsheets. Most of the information required for this analysis is available at no added computational cost from the flowsheet optimizer at the optimal solution. With this tool one can estimate not only the sensitivity of the objective function to increasing capacity but also the expected changes in other decision and dependent variables. Finally, a direct, although crude, way of obtaining sensitivity to structural changes comes from finding the sensitivity of binary or structural variables using the methods of parametric sensitivity.

Structural sensitivity approaches based on McGalliard and Westerberg (1972) derive bounding information based on duality. However, many targets or bounds derive from the physical process itself. In the previous section,

use of energy targeting with grassroots approaches provides the maximum amount of energy integration and represents a goal for retrofit *if the process itself is not allowed to change.* More realistic bounds can be derived by taking into account changes in the process conditions along with changes in energy integration. This strategy was originally demonstrated and formulated using an optimization approach by Duran and Grossmann (1986b). Later, Lang et al (1987) showed how simultaneous heat integration and optimization can be applied to flowsheet simulators. This strategy also allows the use of performance models and thus gives a sharper bound of the measure of improvement with existing equipment. However, as mentioned in the previous section these targets may still have limited usefulness as they often imply grassroots solutions.

Establish and Evaluate Alternative Configurations

This task is ultimately the heart of the retrofit problem and is clearly the most difficult The generation of retrofit alternatives is an open ended one unless specific problems such as heat exchanger networks or distillation sequences are considered. As we argued earlier even here it is explosively large. Clearly many qualitative issues are involved that include the novel use and repositioning of existing equipment as well as the clever incorporation of new technologies. Presently, these issues are best handled through an expert system with a database of process alternatives.

For energy recovery, separation sequences or other synthesis problems with homogeneous tasks, generation of alternatives is a little more straightforward. Here graphical insights such as the TQ diagrams of Andrecovich and Westerberg (198S) can be used as powerful evaluation and synthesis strategies. Moreover, the ability to express heat balances as linear equations allows the choice of a wide number of retrofit configurations to be represented as a mixed integer linear program. Here, Yee and Grossmann (1987) have adapted the transshipment model of Papoulias and Grossmann (1983) to favor networks that use existing exchangers and lead to less repiping in retrofitted heat exchanger networks.

For the general purpose problem, however, the problem can be formulated as a large mixed integer nonlinear programming problem which is normally difficult to solve. Still, encouraging results have been reported by Duran and Grossmann (1986a) as well as Kocis and Grossmann (1986) that show the potential of the outer-approximation strategy to solve these problems.

Thus, the tools developed for the grassroots synthesis problem offer some insight into dealing with the retrofit problem but must clearly be modified to deal with existing equipment and its reuse. The simplification and classification of these tools to accomplish *specialized* retrofit tasks appears to be most promising since retrofit alternatives are better defined and models have special structure. Finally, for the engineer faced with this retrofit

task, coordination and incorporation of these tools to solve large, realistic problems also requires some expert systems concepts. Here tools based on graphical techniques, operations research and simulation must be combined and made available to the engineer in a reliable and easy to understand form. A wide knowledge base is required to deal with generation of retrofit alternatives. Moreover, the power and limitations of these tools need to be apparent and the engineer must have the freedom to incorporate his own alternatives, as well as models of existing equipment and knowledge about retrofit search strategies.

Concluding Remarks

This paper has presented an overview of retrofit design. We see some systematic procedures starting to emerge, especially for heat exchange networks, to a lesser extent for improving economics, energy efficiency and flexibility in continuous processes, and for expanding capacity in multiproduct batch plants.

Among the major questions for retrofit design for which there still is no satisfactory answer are the following.

- How to handle effectively the very large combinatorial problems that arise?
- How to develop valid and tight bounds that can serve as useful targets?
- How to incorporate rating models that can properly account for the performance and reuse of existing equipment?

The proposed outline of a strategy for retrofit design may hopefully point into some useful directions to answer these questions. Clearly much work remains to be done in this challenging and industrially significant research area.

References

Andrecovich, M.J. and A.W. Westerberg, "A Simple Synthesis Method Based on Utility Bounding for Heat Integrated Distillation Sequences", AIChE J., 31, pp. 363-375 (1985)

Barger, D. F. and C. B. Miller, "Convert Resid for Flexibility", Hydrocarbon Processing, p. 68, May (1983)

Bergens, I. and N. R. Udengaard, "Revamp your Hydrogen Plant", Hydrocarbon Processing, p. 65, May (1983)

Biegler, L.T., I.E. Grossmann and G.V. Reklaitis, "Application of Operations Research Techniques in Chemical Engineering", to appear in Engineering Design: Better Results Using OR Methods (1987).

Buffenoir, M. H., "Revamp of 15 year old Ethylene Unit Cuts Energy Costs, Shows Fast Payout", Oil and Gas Journal, 80, p. 36 (1982)

Calandranis, J. and G. Stephanopoulos, "Structural Operability Analysis of Heat Exchanger Networks",

Chem.Eng.Res.Des., 64, p.347 (1986)

Cerda, J. and A.W. Westerberg, "Synthesizing Heat Exchanger Networks having Restricted Stream/Stream Matches using Transportation Problem Formulations", Chem.Eng.Sci.,38, pp.1723-1740 (1983).

Colbert, R.W., "Industrial Heat Exchange Netwoiks", Chem£ng.Progrcss, 92(Aug) pp. 47-54 (1982).

Colberg, R.D. and M. Morari, "Analysis and Synthesis of Resilient Heat Exchanger Networks", to appear in Advances in Chem. Eng. (1986).

Cuthrell, J. E. and L. T. Biegler, "Simultaneous Solution and Optimization of Process Flowsheets with Differential Equation Models", Chem. Eng. Res. Des., 64, pp. 341-346 (1986)

Doldan, O.B., MJ. Bagajewicz and J. Cerda, "Designing Heat Exchanger Networks for Existing Chemical Plants", Comp.Chem.Eng., 9, pp.483-498 (1985).

Douglas, J. M., "A Hierarchical Decision Procedure for Process Synthesis", AIChE J., pp. 363-375 (1985)

Douglas, J. M., *Conceptual Design of Chemical Processes,* McGraw-Hill, to appear (1987)

Duran, M.A. and LE. Grossmann, "An Outer-Approximation Algorithm for a Class of Mixed-Integer Nonlinear Programs", Mathematical Programming, 36, pp.307-339 (1986a)

Duran, MA. and I.E. Grossmann, "A Mixed-Integer Nonlinear Programming Algorithm for Process Systems Synthesis", AIChE J.,32, pp.592-606 (1986b).

Duran, M. A. and I. E. Grossmann, "Simultaneous Optimization and Heat Integration of Chemical Processes", AIChE J.,32, pp. 123-138 (1986c)

Elshout, R. V., "Retrofitting for Energy Savings", Hydrocarbon Processing, p. 109, July (1982)

Fisher, W. R., M. F. Doherty and J. M. Douglas, "Screening of Process Retrofit Alternatives", Paper lb, AIChE Annual Meeting, Chicago, IL (1985)

Grossmann, I.E. and C.A. Floudas, "Active Constraint Strategy for Flexibility Analysis in Chemical Process Design", Engineering Design Research Center, Report EDRC-06-07-86, Carnegie-Mellon University (1986) (Also to appear in Comp.Chem.Eng., 1987).

Grossmann, IJE. and M. Morari, "Operability, Resiliency and Flexibility: Process Design Objectives for a Changing

World", Proceedings 2nd. Int. Conf. on Foundations of Computer-Aided Process Design (Eds. A.W. Westerberg and H.H. Chien), p. 931 (1984).

Gundersen, T. and L. Naess, "The Synthesis of Cost Optimal Heat Exchanger Networks-An Industrial Review of the State-of-the-Art", presented at CEF 87 Congress, Taormina, Italy (1987).

Hohmann, E.C., "Optimum Networks for Heat Exchange", Ph.D. thesis, Univ. Southern California (1971).

Itoh, J., K. Shiroko and T. Umeda, "Extensive Application of the T-Q Diagram to Heat Integrated System Synthesis", Proceedings PSE-82, Kyoto, Japan (1982).

James, G. R. and K. J. Stokes, "Energy Efficiency in Ammonia Plants", CEP, 80,6, p. 33 (1984)

Johnnie, D. H. and H. J. Klooster, "Upgrading Refineriesfor Energy Conservation", CEP, 80,6, p. 42 (1984)

Johnson, W. D., "On Entropy, Efficiency and Process Design", Hydrocarbon Processing, p. 61, February (1983)

Jones, D.A., A.N. Yilmaz and B.E. Tilton, "Synthesis Techniques for Retrofitting Heat Recovery Systems", ChemingProgr., 82(July), pp. 28-33 (1986).

Klossner, J. and D.W.T. Rippin, "Combinatorial Problems in the Design of Multipurpose Batch Plants- Extension to Multiplant and Partly Parallel Operations", Annual AIChE Mtg., Paper No. 104e, San Francisco (1984).

Kocis, G. R. and I. E. Grossmann, "Relaxation Strategy for the Structural Optimization of Process Flowsheets", Paper 4b, AIChE Annual Meeting, Miami Beach, FL (1986)

Kotjabasakis, E. and B. Linnhoff, "Sensitivity Tables in the Design of Flexible Processes. I: How Much Contingency in Heat Exchanger Networks is Cost Effective?", Chem.Eng.Res.Des., 24, pp.197-211 (1986)

Lang, Y.D., L.T. Biegler, and LE. Grossmann, "Simultaneous Optimization and Heat Integration with Process Simulators", EDRC Report 06-16-87

Linnhoff, B. and J.R. Rower, "Synthesis of Heat Exchanger Networks.I: Systematic Generation of Energy Optimal Networks", AIChE J., 24, pp. 633-642 (1978).

Linnhoff, B. et al, "Users Guide on Process Integration for the Efficient Use of Energy", Inst.Chem.Eng., UK (1982).

Linnhoff, B., H. Dundorf and R. Smith, "Heat Integration of Distillation Columns into Overall Processes",

Chem.Eng.Sci., 38, pp. 1175-1188(1983).

Linnhoff, B. and D.R. Vredeveld, "Pinch Technology Has Come of Age", Chem. Eng.Prog., 80 (July), pp. 33-40 (1984).

Linnhoff, B. and E. Kotjabasakis, "Downstream Paths for Operable Process Design", Chem.Eng.Prog., 82 (May), pp.23-28 (1986).

Locke, M. H., R. H. Edahl, and A. W. Westerberg, "An Improved Successive Quadratic Programming Optimization Algorithm for Engineering Design Problems", AIChE J., 29,5, pp. 871-874 (1983)

McGalliard, R.L. and A.W. Westerberg, "Structural Sensitivity Analysis in Design Synthesis", Chem.EngJ., 4, pp.l27-138(1972).

Ng, S. M. and G. L. Thompson, "A Symmetric, Dimension Expanding Primal Dual Algorithm for Solving Quadratic Programs", GSIA Report, Carnegie-Mellon University (1986)

Papoulias, S.A. and LE. Grossmann, "A Structural Optimization Approach in Process Synthesis.II: Heat Recovery Networks", Com.Chem.Eng., 7, pp. 707- 721 (1983).

Pistikopoulos, E.N. and I.E. Grossmann, "Optimal Retrofit Design for Improving Process Flexibility in Linear Systems", Engineering Design Research Center, Report EDRC-06-24-87, Carnegie-Mellon University (1987).

Saboo, A.K. and M. Morari, "Design of Resilient Processing Plants. IV: Some New Results on Heat Exchanger Network Synthesis", Chem.Eng.Sci., 39, pp.579-592 (1984).

Saboo, A.K., M. Morari and R.D. Colberg, "RESHEX- An Interactive Package for the Synthesis and Analysis of Resilient Heat Exchanger Networks. I: Program Description and Application", Comp.Chem.Eng., 10, pp. 577-589 (1986).

Saboo, A.K., M. Morari and D.C. Woodcock, "Design of Resilient Processing Plants. VIII: A Resilience Index for Heat Exchanger Networks", Chem. Eng.Sci., 40, pp. 1553-1565(1985).

Sparrow, R.E., GJ. Forder and D.W.T. Rippin, "The Choice of Equipment Sizes for Multiproduct Batch Plants", Ind.Eng.Chem. Process Des. Dev., 21, p.94-103 (1975).

Steinmeyer, D., "Process Energy Retrofits", CEP, 80,6, p. 47 (1984)

Swaney, R.E. and IJL Grossmann, "An Index of Operational Flexibility in Chemical Process Design. I: Formulation and Theory", AIChE J., 31, pp. 621- 630 (1985a).

Swaney, RJ3. and I.E. Grossmann, "An Index of Operational Flexibility in Chemical Process Design. II: Computational Algorithms[1]*, AIChE J., 31, pp.631-642 (1985b).

D. L. Terrill and J. M. Douglas, "Optimization and Operability of Heat Exchanger Networks", Paper 35b, AIChE Annual Meeting, Chicago, IL (1985)

Thompson, R.W. and CJ. King, "Systematic Synthesis of Separation Schemes", AIChE J., 18,2, p.941 (1972)

Tjoe, T.N. and B. Linnhoff, "Using Pinch Technology for Process Retrofit", Chem.Eng., 93(8), pp. 47-60 (1986).

Townsend, D.W. and B. Linnhoff, "Heat and Power Networks in Process Design. I: Criteria for Placement of Heat Engines and Heat Pumps in Process Networks", AIChE J., 29, pp.742-748 (1983).

Townsend, D.W. and B. Linnhoff, "Surface Area Targets for Heat Exchanger Networks", LChem.E. Annual Res. Mtg., Bath (1984).

Umeda, T., J. Itoh and K. Shiroko, "Heat Exchange System Synthesis", Chemiing. Prog., 74(7), pp. 70-76 (1978).

Umeda, T., K. Niida and K. Shiroko, "A Thermodynamic Approach to the Synthesis of Heat Integration in Distillation Systems", AIChE J., 25, pp. 423-429 (1979a).

Umeda, T., T. Harada and K. Shiroko, "A Thermodynamic Approach to the Synthesis of Heat Integration Systems in Chemical Processes", Comp.ChemJEng., 3, pp. pp.273-282 (1979b).

Vasantharajan, S., M.S. Thesis, Carnegie-Mellon University (1987)

Vaselenak, J.A., LE. Grossmann and A.W. Westerberg, "Optimal Retrofit Design of Multiproduct Batch Plants", Engineering Design Research Center, Report EDRC-06-05-86, Carnegie-Mellon University (1986) (Also to appear in Ind.Eng.Chem.Res., 1987).

Westerberg, A.W., 'The Heat Path Diagram for Energy Management", AIChE Diamond Jubilee Meeting, Washington, D.G (1983).

Yee, T.F. and *IE.* Grossmann, "Optimization Model for Structural Modifications in the Retrofit of Heat Exchanger Networks", Engineering Design Research Center, Report EDRC-06-25-87, Carnegie-Mellon University (1987).

Yeh, N.C.C. and G.V. Reklaitis, "Synthesis and Sizing of Batch/Semicontinuos Processes", AIChE **Annual** Mtg., **Paper No. 35a, Chicago (1985).**

List of Figures

Figure 1: Example Retrofit Design Problem. (a) Original flowsheet with non-integrated aftercooler and reboiler. (b) Redesign with two new exchangers. (c) Redesign with new reboiler in parallel. 7

Figure 2: Grassroots and estimated retrofit area as a function of energy requirement. 12

Figure 3: Energy target for specified payout. 12

Figure 4: Identification of matches crossing the punch temperature in grid diagram. 13

Figure 5: Superstructure for equipment addition in multiproduct batch plant. 15

Figure 6: Rectangle T(F) corresponding to index of flexibility F with reference to rectangle T for uncertain parameters θ_1, θ_2. 16

Figure 7: Trade-off curve of cast vs. flexibility target for existing design with flexibility F_E. 18

Figure 8: Simplex S(RI) corresponding to resilience index RI for load disturbances l_1, l_2. 18

Figure 9: Performance vs. Design Models. 22

List of Tables

Table 1: Growth of Tasks and Sequences with Number of Components 5

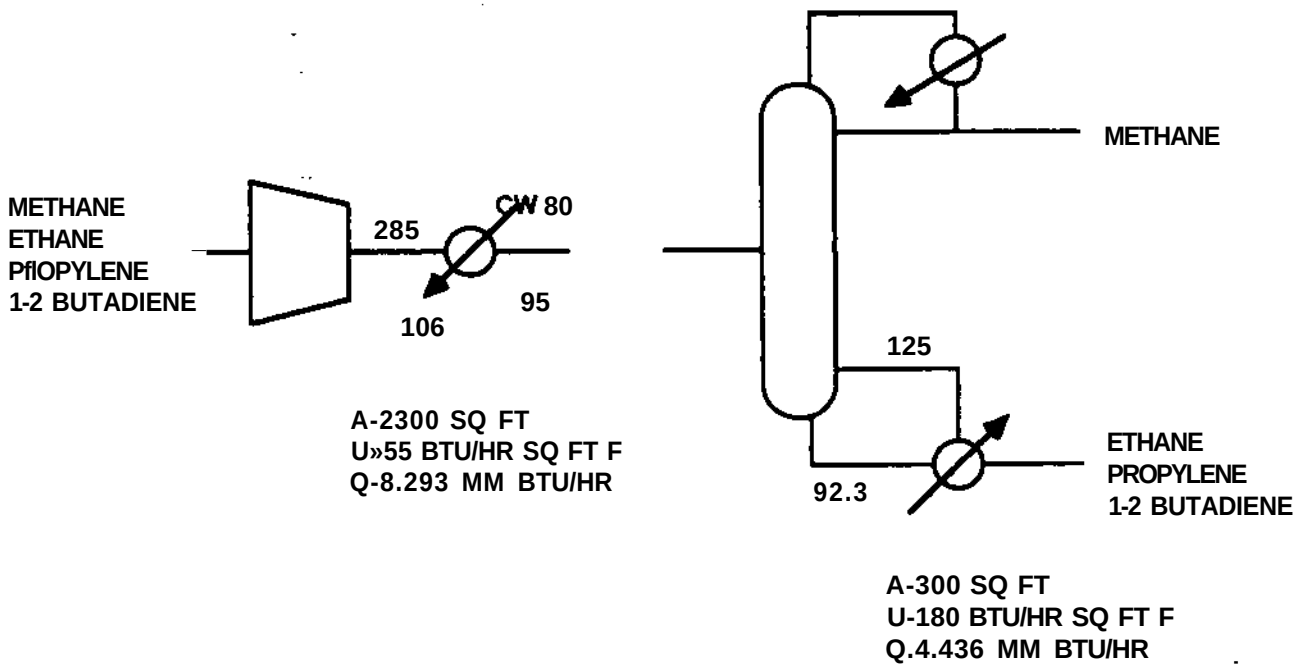

(A)

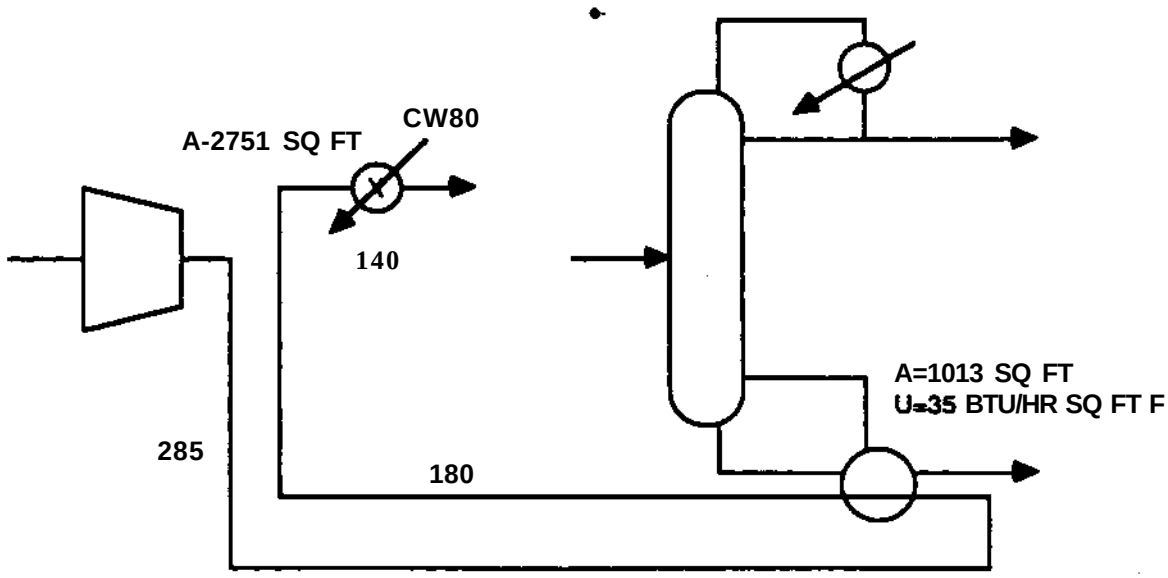

(B)

FIG 1 CONTD NEXT PAGE

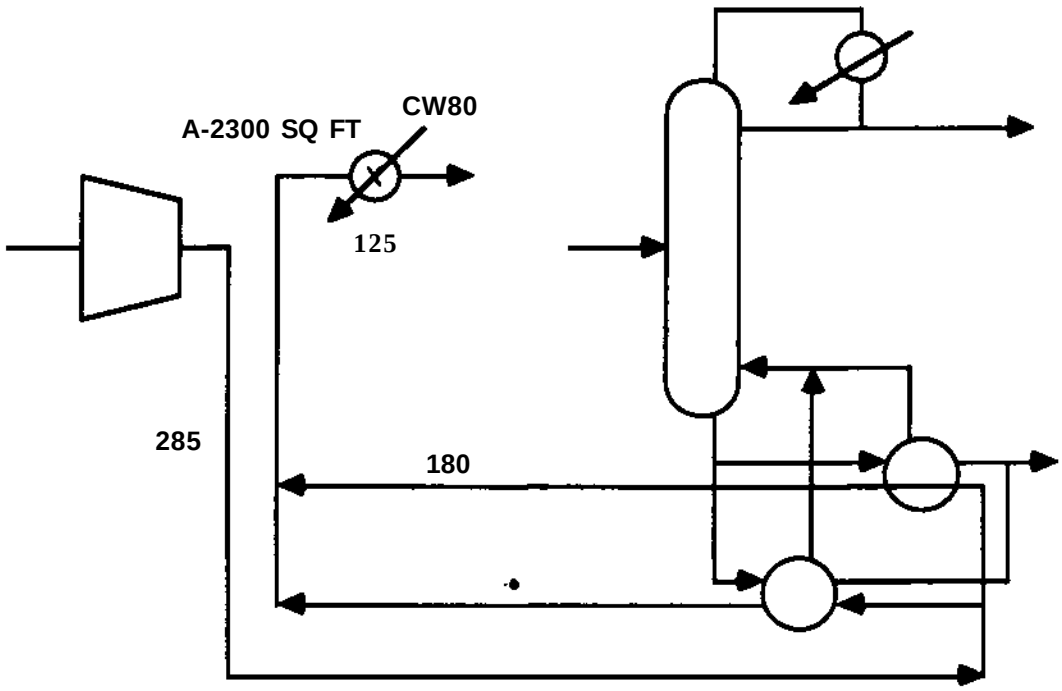

(C)

FIG 1 EXAMPLE RETROFIT DESIGN PROBLEM. (A) ORIGINAL FLOWSHEET WITH NON-INTEGRATED AFTERCOOLER AND REBOILER. (B) REDESIGN WITH TWO NEW EXCHANGERS. (C) REDESIGN WITH NEW REBOILER IN PARALLEL;.

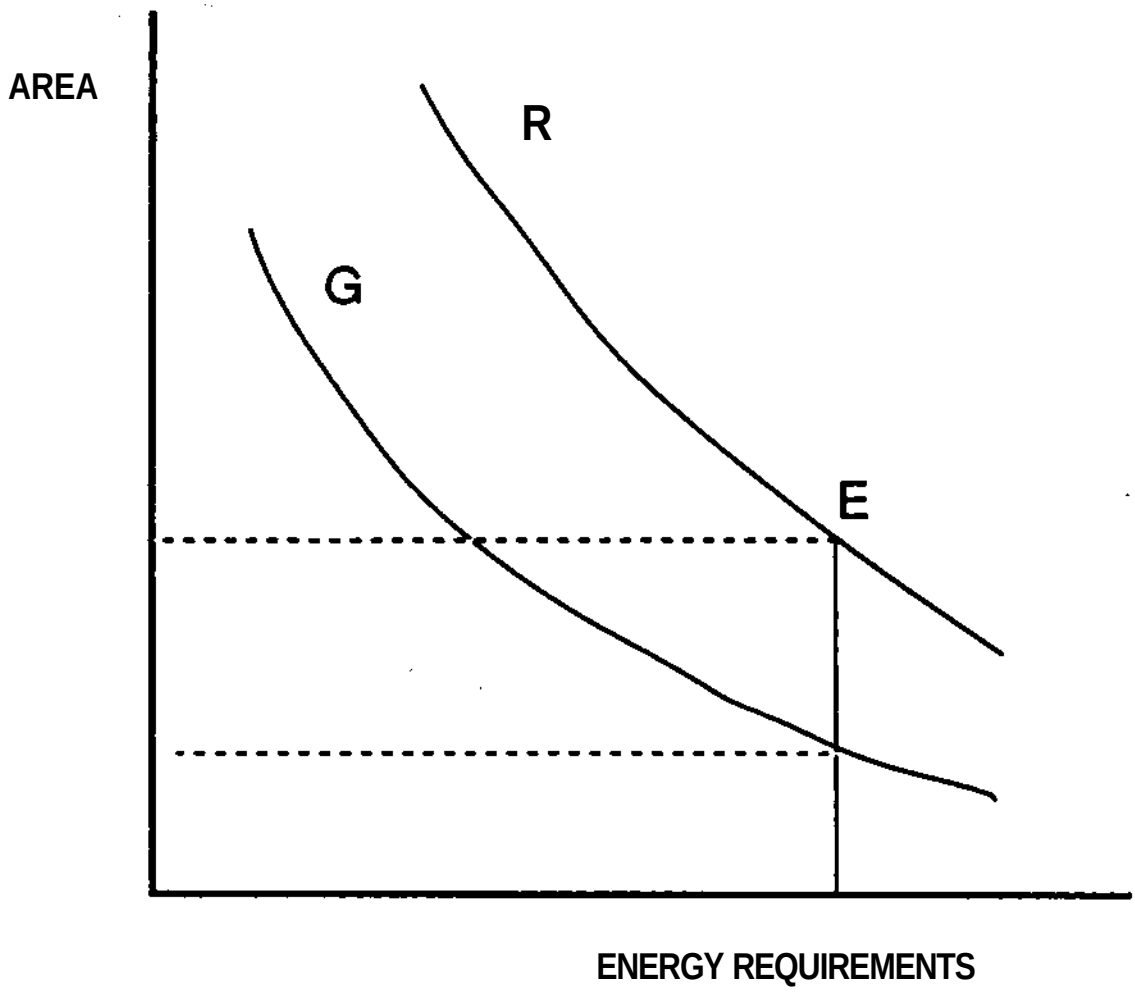

FIG 2 GRASSROOTS AND ESTIMATED RETROFIT AREA AS A FUNCTION OF ENERGY REQUIREMENTS

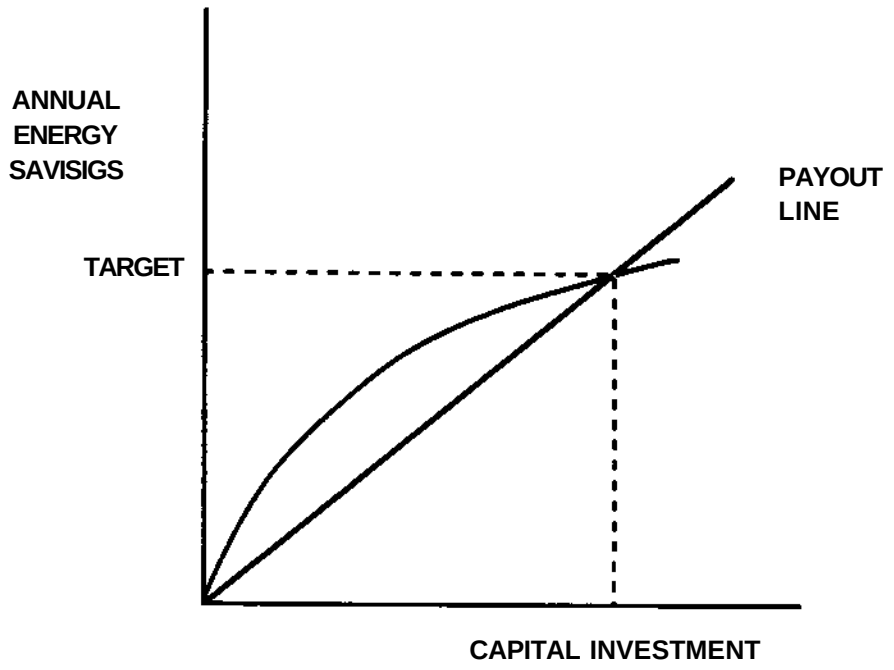

FIG 3 ENERGY TARGET FOR SPECIFIC PAYOUT

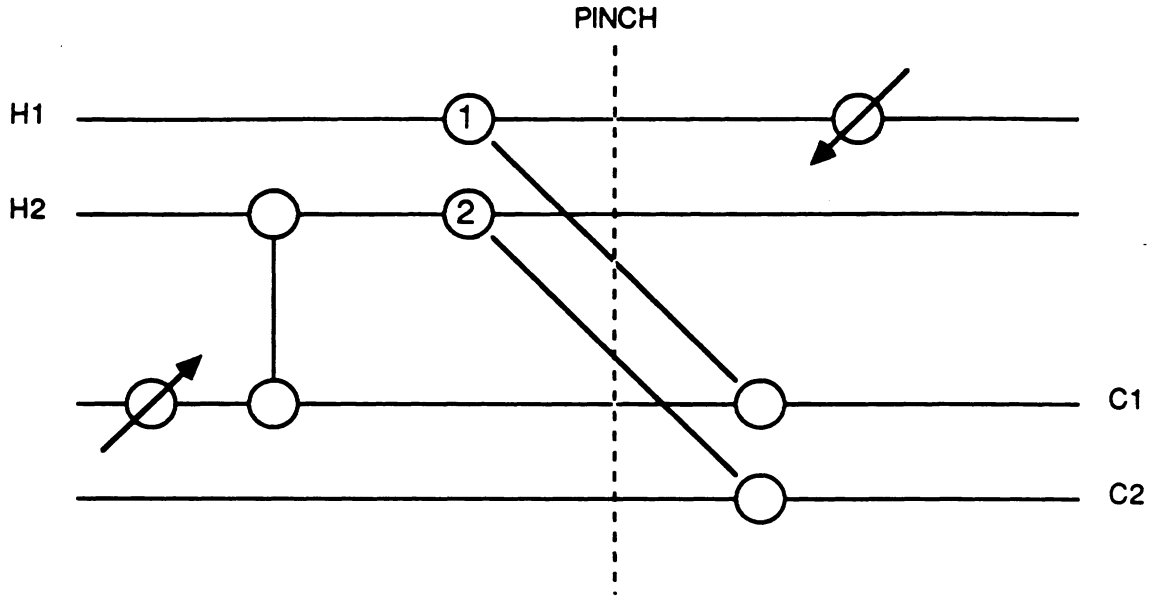

FIG 4 IDENTIFICATION OF MATCHES CROSSING THE PINCH TEMPERATURE IN GRID DIAGRAM

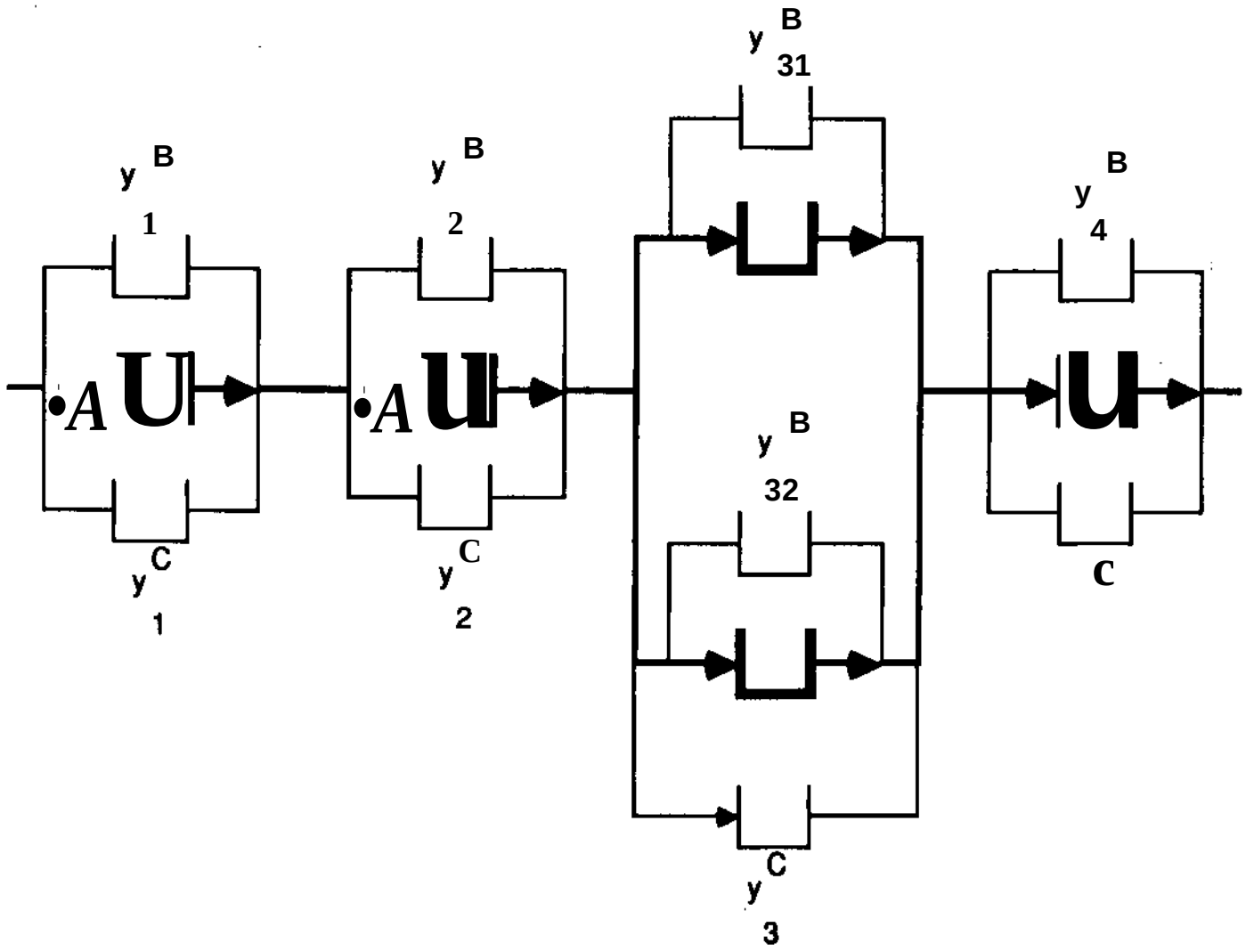

FIG 5 SUPERSTRUCTURE FOR EQUIPMENT ADDITION

IN MULTIPRODUCT BATCH PUNT

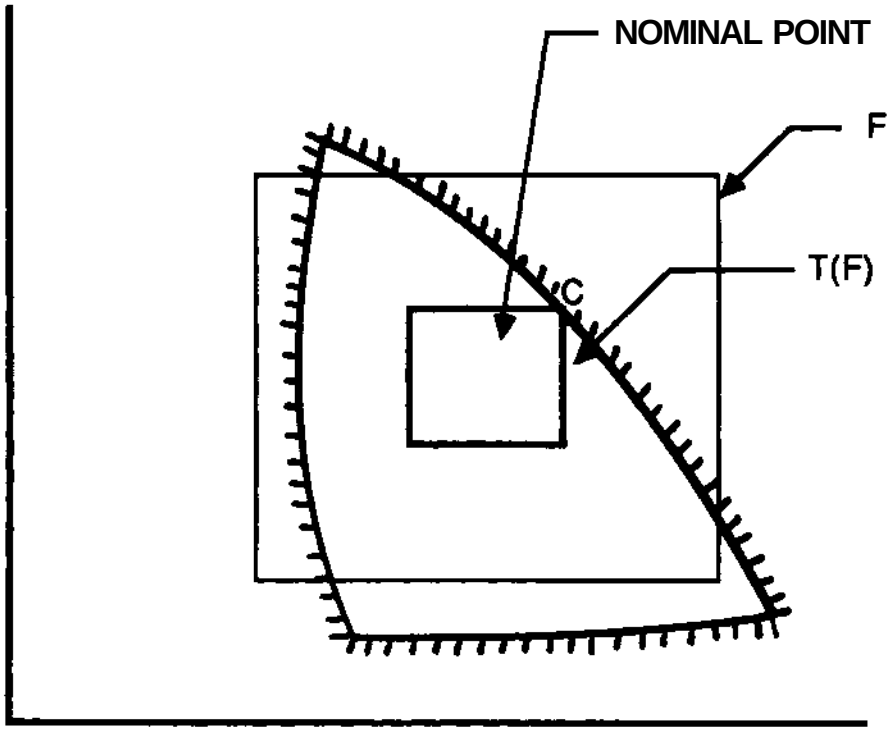

FIG 6 RECTANGLE T(F) CORRESPONDING TO INDEX OF FLEXIBILITY F WITH REFERENCE TO RECTANGLE T FOR UNCERTAIN PARAMETERS

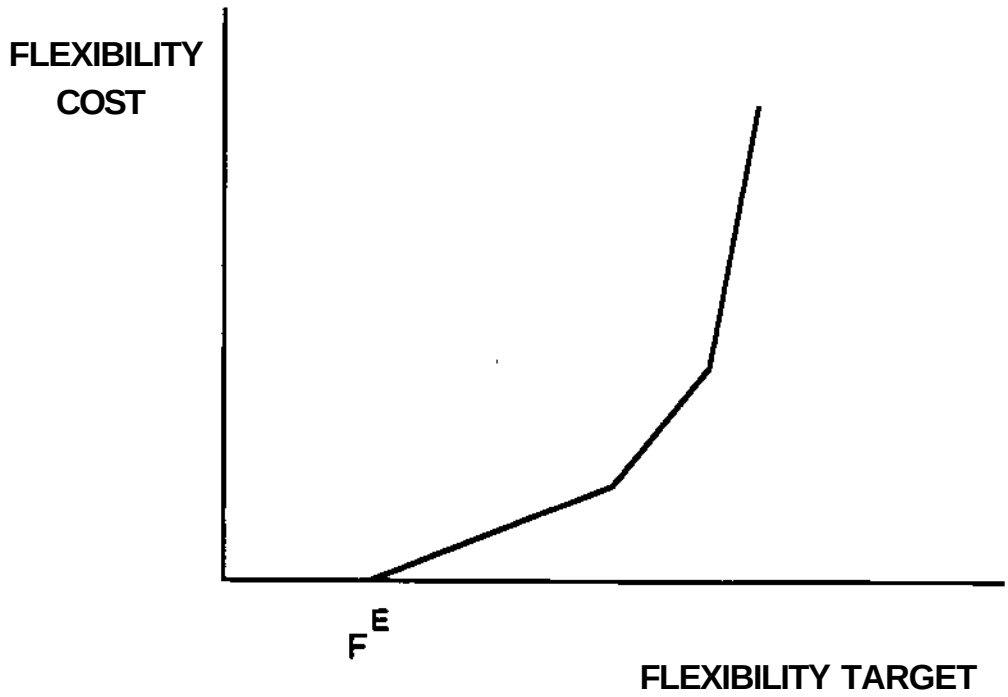

FIG 7 FLEXIBILITY CURVE OF COST VS FLEXIBILITY TARGET FOR EXISTING DESIGN WITH FLEXIBILITY F^E

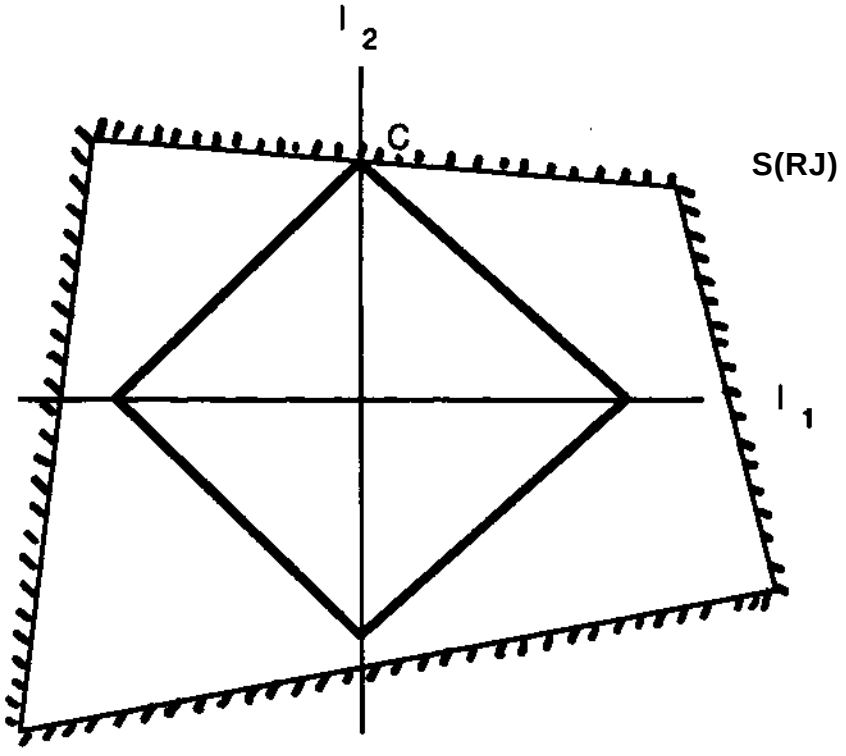

FIG 8 SIMPLEX S(RJ) CORRESPONDING TO RESILIENCE INDEX RJ FOR LOAD DISTRIBUTION I_1, I_2

DESIGN CALCULATION

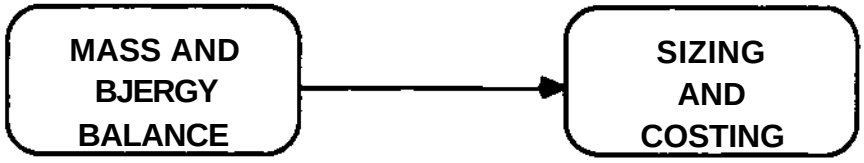

PERFORMANCE CALCULATION

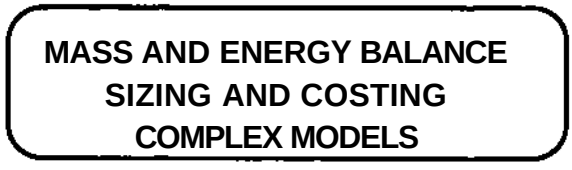

CONSTRAINED CALCULATIONS FOR
EXISTING EQUIPMENT

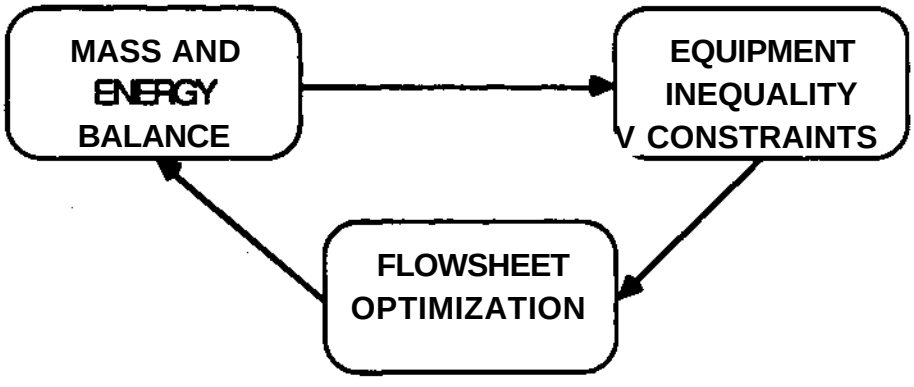

FIG 9 PERFORMANCE VS DESIGN MODELS