Carnegie Mellon University
Research Showcase @ CMU

Department of Chemical Engineering | Carnegie Institute of Technology

1988

A modelling and decomposition strategy for the MINLP optimization of process flowsheets

Gary R. Kocis
Carnegie Mellon University

Ignacio E. Grossmann

Carnegie Mellon University.Engineering Design Research Center.

Follow this and additional works at: http://repository.cmu.edu/cheme

Recommended Citation
.

This Technical Report is brought to you for free and open access by the Carnegie Institute of Technology at Research Showcase @ CMU. It has been accepted for inclusion in Department of Chemical Engineering by an authorized administrator of Research Showcase @ CMU. For more information, please contact research-showcase@andrew.cmu.edu.

NOTICE WARNING CONCERNING COPYRIGHT RESTRICTIONS:
The copyright law of the United States (title 17, U.S. Code) governs the making of photocopies or other reproductions of copyrighted material. Any copying of this document without permission of its author may be prohibited by law.

A Modelling and Decomposition Strategy for the MINLP Optimization of Process Flowsheets

by

Gary R. Kocis and Ignacio E. Qrossmann

EDRC 06-48-89

A MODELLING AND DECOMPOSITION STRATEGY FOR THE MINLP OPTIMIZATION OF PROCESS FLOWSHEETS

Gary R. Kocis* and Ignacio E. Grossmann **

Department of Chemical Engineering

Carnegie Mellon University

Pittsburgh, PA 15213

October, 1988

* Currently with the Shell Development Company, WesthoUow Research Center, Houston, TX 77251-1380.

** Author to whom correspondence should be addressed.

University Libraries
Carnegie Mellon University
Pittsburgh, Pennsylvania 15213

ABSTRACT

This paper shows that in structural flowsheet optimization problems that are formulated as mixed-integer nonlinear programming (MINLP) problems, modelling can have a great impact in the quality of solutions that are obtained, as well as on the computational efficiency. A modelling/decomposition strategy is proposed to exploit the special structure of flowsheet synthesis problems that are to be solved with the OA/ER algorithm. The objective of this procedure is to reduce the computational effort required to solve the MINLP optimization problem, and to reduce the effect that nonconvexities can have in cutting-off the global optimum. The modelling strategy eliminates nonconvexities in the interconnection nodes through linear constraints and valid outer-approximations. The decomposition strategy has the important feature of only requiring the NLP optimization of the current candidate flowsheet Nonexisting units in the superstructure are suboptimized through a Lagrangian decomposition scheme. Application of the proposed modelling/decomposition procedure is illustrated with several examples, including the synthesis of the HDA toluene process.

INTRODUCTION

The use of mathematical programming techniques for process synthesis has received increasing attention over the last few years. For instance, linear programming (UP) models have been proposed for synthesizing heat exchanger networks (Cerda and Westcrberg, 1983; Papoulias and and Grossmann, 1983), mixed-integer linear programming (MHP) models for distillation sequences (Andrecovich and Westerberg, 1985) and total processing systems (Papoulias and Grossmann, 1983), nonlinear programming (NLP) techniques for heat exchanger networks (Floudas et al, 1986), and separation sequences (Floudas, 1987) and mixed-integer nonlinear programming (MINLP) models for structural flowsheet optimization (Kocis and Grossmann; 1987,1988a). The major reason for this increased interest lies in the fact that mathematical programming techniques provide a systematic framework for process synthesis, actually complementing the heuristic and thcrmodynamic targeting approaches (see Grossmann, 1985; Roquet ctal., 1988).

At the same time there has been substantial progress in methods and software for solving optimization problems. This is primarily due to increases in the efficiency of optimization codes (MPSX [IBM, 1979] for LP/MILP , MINOS [Murtagh and Saunders, 1985] for LP/NLP), advances in optimization algorithms (interior point methods [Karmarkar, 1984] for LP, successive quadratic programming algorithms [Han, 1977; Powell, 1977] for NLP), development of powerful modelling languages (General Algebraic Modelling System, GAMS [Kcndrick and Meeraus, 1985]), and technological advances in computing.

In addition to progress in solving LP, MILP, and NLP problems, an important recent development is the Outer-Approximation (OA) algorithm (Duran and Grossmann, 1986a) and its extension with the Equality-Relaxation (OA/ER) strategy (Kocis and Grossmann, 1987) for solving mixed-integer nonlinear programming (MINLP) problems. Other available methods for solving MINLP problems include branch and bound procedures, Generalized Benders Decomposition (GBD) (Benders, 1962; Geoffrion, 1972), and the feasibility technique by Mawengkang and Murtagh (1986); Mawengkang (1988).

However, even with the improved optimization tools that are available, one cannot expect efficient and reliable performance on arbitrary optimization problem formulations for process synthesis. Often, for a given problem, there are several different formulations which appear equivalent but in fact require significantly different computational effort in their solution.

Furthermore, one formulation may lead to the global optimum while another may lead to only a suboptimal solution.

Recently, researchers have investigated the importance of the formulation/reformulation of MHJP problems and reported results which clearly verify that the problem formulation can be critical for efficient solution. The main idea is to tighten the problem through reformulation so as to reduce the gap between the solution of the MELP problem and that of the LP relaxation of the original problem (integrality gap). A tight formulation is important because the computational success of a branch and bound algorithm (common method used to solve MILP problems) often depends on the size of the integrality gap. Martin and Schrage (1985), Crowder, Johnson, and Padberg (1983), and Van Roy and Wolsey (1983 ,1984) have recently proposed special methods to reduce the integrality gap in MILP problems.

It is also well known that care must be exercised when formulating NLP problems. Nonlinear terms in the objective function and constraints should be continuous and differentiable over the complete range of variable values. The model should be as linear as possible and it is preferable, to have nonlinearity in the objective function rather than in the constraints (Drud, 1985). In order to guarantee that the solution found is the global optimum, the problem must be cast as a* convex programming problem whenever possible (eg. through convexifying transformations).

Finally, as one might expect, the particular form of an MINLP formulation can have a great impact on the performance of the algorithm and the global optimality of the solutions obtained. In this paper, it will first be shown that straightforward MINLP formulations for process synthesis problems can often be trapped into local solutions. The first example illustrates that a source of potential problems for the OA/ER, GBD and branch and bound methods arises when units described by nonlinear models are driven to zero in the optimization of a flowsheet superstructure. A second example illustrates the difficulty which can occur when the OA/ER algorithm is applied to an MINLP problem involving stream splits. Although in principle one can include constraints to avoid zero flows and resort to MINLP techniques for handling nonconvexities that are present in these problems (Kocis and Grossmann, 1988a), it is clearly advisable to determine whether alternative formulations can actually circumvent these difficulties.

A special modelling / decomposition strategy is proposed in this paper for the effective

application of die OA/ER algorithm to structural flowsheet optimization problems. The procedure exploits the separability of the MINLP for process superstructures by partitioning the superstructure into nodes for process units and interconnection units. Special model equations are developed for interconnection units which provide exact representations or valid outer-approximations of the nonconvex functions associated with these units. Also, a decomposition scheme is developed which has the important feature of requiring only the NLP optimization of the flowsheet selected at each iteration of the OA/ER algorithm, rather than optimization of the entire superstructure. Disappearing process units in the flowsheet superstructure are handled by a Lagrangian suboptimization procedure to generate linearizations of good quality for the MILP master problem. Furthermore, linearizations for this problem are modified for zero value flow and design variable selections. Application of the proposed procedure is illustrated with several example problems, including the synthesis of a toluene hydrodealkylation process.

BACKGROUND

Since the proposed modelling/decomposition scheme will be applied to within the OA/ER algorithm, only a brief review of this method will be given in the context of the process synthesis problem. A more extensive discussion can be found in Kocis and Grossmann (1987, 1988a,b) and Duran and Grossmann (1986a). The chemical process synthesis problem involves selecting the optimal flowsheet structure as well as the parameters which describe the operation of a desired process. This problem can be formulated as an MINLP problem. In order to define the search space of candidate flowsheet alternatives, one should first perform a preliminary screening (e.g. see Rudd et al., 1973; Mahalec and Motard, 1977; Douglas, 1988;) using engineering insight, heuristics, and/or thcrmodynamic targets to select a flowsheet superstructure. This flowsheet superstructure contains several potentially attractive flowsheet alternatives from which the optimal process flowsheet is to be identified. The solution of the resulting MINLP problem yields both the structure of the process flowsheet as well as the parameters (operating conditions, stream flowrates, ect) that describe the process operation. The process synthesis problem gives rise to an MINLP problem of the general form:

$$
\begin{aligned}
Z = \min\ & c^r y + /(x) \\
s.t.\ & h(x) = O \\
& g(x) \le 0 \\
& Ax * a \qquad\qquad\qquad\qquad \textbf{(MINLP)} \\
& By + Cx £ d \\
& X € X = \{x | X € R^*, x^L \le x \le x^U\} \\
& y \in Y = \{y | y \in \{0,1\}^m, Ey \le e\}
\end{aligned}
$$

The continuous variables **x** represent flows, operating conditions, and design variables. The binary variables y denote the potential existence of process units. These variables typically appear linearly as they are included in the objective function to represent fixed charges for the purchase of process equipment (in the term $c^r y$) and in the constraints to enforce logical conditions (in the constraints By + Cx £ **d** and Ey £ e). The term/(x) is often a linear term involving purchase costs for process equipment (cost coefficients multiplying equipment capacities or sizes), raw material purchase costs, product/by-product sales revenues, and utility costs. The nonlinear performance and sizing equations correspond to **h(x)=0** and the inequality constraints g(x) £ 0 include design specifications which are typically linear inequalities. Finally, the linear equations include mass balances and relations between the states of process streams.

The solution to the above MINLP optimization problem can be obtained with the OA/ER algorithm (Kocis and Grossmann, 1987). This algorithm can be classified as a decomposition scheme in which the continuous optimization and the discrete optimization are performed separately. The continuous optimization is performed through NLP subproblems that arise for fixed choices of **y** in problem **(MINLP).** The NLP subproblem solution provides an upper bound on the solution to problem **(MINLP)** as well as values for the continuous variables x and Lagrange multipliers for relaxing the nonlinear equations in the master problem. The discrete optimization is performed via an MILP master problem which is intended to predict lower bounds on the solution of problem (MINLP). In the master problem, the nonlinear functions in **(MINLP)** are replaced by an accumulation of linearizations derived at the solution of the NLP * * subproblems. The steps of the iterative bounding procedure in the OA/ER algorithm are formally

stated in Appendix A. It should also be noted that sufficient conditions for obtaining the global optimum require convexity of $f(x)$, $g(x)_9$ and quasiconvexity of the relaxation of the equations $h(x)=0$.

EXAMPLES

The following two small examples will illustrate difficulties that can be encountered when modelling MINLP optimization problems in process synthesis. The first example shows that straightforward formulation of an MINLP for the selection of reactors, that are described by nonlinear models, can cause the OA/ER algorithm, GBD, and a branch and bound procedure to find a suboptimal solution. The second example addresses a problem which can arise when applying the OA/ER algorithm to an MINLP problem containing nonconvex (bilinear) stream splitters equations.

EXAMPLE 1.

Figure 1 contains a very simple example of a superstructure for a problem of selecting from among two candidate reactors the one that minimizes the cost of producing a desired product The MINLP formulation of this problem is given as (EX1):

$$\min COST = 7.5\,y1 + 5.5\,y2 + 7\,v1 + 6\,v2 + 5\,x$$

$$\begin{aligned}
\text{s.t.}\quad & z1 \geq 0.9\,[1 - \exp(-0.5\,v1)]\,x1 \\
& z2 \geq 0.8\,[1 - \exp(-0.4\,v2)]\,x2 \\
& x1 + x2 - x \leq 0 \\
& z1 + z2 \geq 10 \\
& v1 \leq 10\,y1 \\
& v2 \leq 10\,y2 \\
& x1 \leq 20\,y1 \\
& x2 \leq 20\,y2 \\
& y1 + y2 = 1 \\
& x1, x2, z1, z2, v1, v2 \geq 0 \\
& y1, y2 = 0 \text{ or } 1
\end{aligned} \qquad \text{(EX1)}$$

The binary variables y1 and *y1* denote the existence (nonexistence) of reactors 1 and 2 when their value is 1 (0). In the objective function, there are fixed charges for purchasing reactor 1 (7.5) or reactor 2 (5.5), linear terms in v1 and v2 (reactor volumes), and die purchase price for raw material x. The two nonlinear equations are the input-output relations for the reactors which define the output flows (z1 and z2) in terms of the input flows (x1 and x2) and the reactor volumes. The raw material x is split into the reactor input flows x1 and x2; a total demand of 10 units must be met by the output flows z1, z2. The next four inequalities are logical constraints which insure that if a given reactor does not exist (eg. y1=0), then the corresponding volume and **feed** stream are zero. The last constraint requires that either reactor 1 or reactor 2 be selected.

The optimal solution to this MINLP problem is C0ST*=99.24O at (y1*,y2*)=(1,0), (x1*,x2*M13.428,0.0), and (v1*, v2*)=(3.514,0.0). The suboptimal solution corresponding to (y1,y2)=(0,1) has an objective function value of 107.376 at (x1,x2)=(0.0,15.0) and (v1,v2M0.0,4.479). If the OA/ER algorithm is applied to the MINLP problem (EX1) with (y1,y2M0,1) selected as the initial point, then the algorithm terminates after only one major iteration and fails to find the optimal solution. The MILP master problem is infeasible during iteration 1, causing termination at a suboptimal solution with *COST*=107.376.

The reason that the optimal solution was not found lies in the MILP master problem and the linearizations derived at die solution to the first NLP subproblem. The relaxed inequalities for the first-oider linearizations of the two nonlinear equations are given by:

$$zl \text{ £ } 0 \tag{1}$$

$$zl \leq 0.666x2 + 0.800v2 - 3.584$$

Note that the linearization of the input-output relation for reactor 1 has reduced to zl less than or equal to zero due to the fact that the point of linearization is xl=0.0,vl=0.0. At these values, the derivatives of the nonlinear term 0.9[l-exp(-0.5vl)Jxl with respect to xl and vl are both zero. Hence, the nonconvexity has caused the linearization to underestimate the nonlinear feasible region and the point of linearization has magnified the problem. The integer cut constraint in the master problem forces $y1 = 1$ and $yl = 0$. At $yl = 0$, the logical constraints with the nonnegativity constraints yield $x2 = 0$ and $v2 = 0$. At these values, however, the linearization for reactor 2 cannot be satisfied since *zl* is nonnegative. The master problem has no feasible solution and the OA/ER algorithm terminates.

It is interesting to observe how this problem formulation also affects the performance of GBD and branch and bound methods. Applying GBD to (EX1) with the initial point (y1,^2)=(0,1) results in convergence to the suboptimal *(COST**107.376) solution in one major iteration because the MILP master problem (the integer cut, *y2-yl* £ 0, was included) predicted the lower bound 109.376, which fails to underestimate the global optimum. The problem with GBD occurred because the Lagrange multipliers for the four logical constraints were all zero. These multipliers are used to formulate the Lagrangian in the master problem of GBD (see Kocis and Grossmann, 1987).

The formulation of this problem also was found to have an effect on the behavior of a branch and bound procedure. The influence was seen at the level of the relaxed NLP problem, the MINLP problem with the integrality conditions on *yl* and *yl* relaxed (i.e. 0 £ *yl* £ 1). Using formulation (EX1), the solution to the relaxed NLP was found to depend on the initial point selected. Two local solutions were obtained: C0ST=1O7.376 at (ylj2)=(0,l) and COST=97.939 at (ylj£)^{SB}(0.3475,0.6525). In the case of the first local solution, which yields integer values, the branch and bound procedure would terminate with a suboptimal MINLP solution. The second

local solution of the relaxed NLP leads to the optimal MINLP solution. It will be shown later how the difficulties in the MINLP problem (EX1) can be avoided with the proposed modelling/decomposition strategy.

EXAMPLE 2.

Consider the problem of selecting the optimal separation scheme to be used to separate a multicomponent process stream into a set of product streams with given purity specifications. For simplicity we present a system which contains two components (A and B) which ait available in feedstreams Fl and F2. The compositions of these streams are 55% A / 45% B and 50%A/50%B, respectively and the desired product streams axe PI and P2. Purity specifications are a minimum of 80% A in product PI and a minimum of 75% B in P2. Upper bounds are specified for the amounts of these products. Hence, there is the possibility of producing as much as these amounts, or at the other extreme not to produce any product if the separation scheme proves to be unprofitable.

Figure 2-a is a superstructure of alternative separation schemes which can be used to deliver the desired product streams. Alternatives embedded in this superstructure include: flash separation with blending, distillation with blending, flash separation and distillation in parallel, or the elimination of the complete separation process. As seen in Figure 2-a, streams Fl and F2 are first mixed to yield stream F3 which enters a simple stream splitter. The stream is split into four streams (F4, F5, F6, and F7). F4 and F5 are input streams to the flash separator and distillation column, while F6 and F7 bypass the separation units and are blended with the top and bottom streams from the flash and column, respectively. Simple linear models are used for the flash separator and distillation column where fixed recoveries are assumed. The nonlinearity in this problem is then limited to the stream splitter as can be seen in the MINLP formulation given in Appendix B. Note that the equations describing the stream splitter contain bilinear terms (i.e. F4A x E4). The objective function to be maximized is profit which is given as revenues - costs. Revenues include the sales of PI and P2, while costs include purchase costs for Fl and F2 as well as costs for the flash separator and distillation column.

Applying the OA/ER algorithm to this nonconvex MINLP problem yields the results in Table I which were obtained from each of the 4 different starting points for the binary variables. Note that since the objective function is the maximization of profit, the NLP subproblems yield lower

bounds while the MILP master problems predict upper bounds on the solution to the MINLP *problem.* As seen in Figure 2-b, the optimal solution corresponds to die separation scheme which mail Mt use of both the flash separator and the column (i.e. YD»YF*1 indicating that both the distillation column and flash exist). The optimal objective function value for this structure has a profit of $511.87xl0fyr. The results in Table I show that only 1 of the 4 initial points leads to the global solution, and that this starting point is YF*YD*1, which is the optimal solution. The reason why the other 3 initial points lead to suboptimal solutions is that the bilinear constraints for the stream splitter introduce nonconvexities into the MINLP problem (see also Wehe and Wcstcrbcrg, 1987). Thus, the upper bound predicted by the MILP master problem is not necessarily a valid bound and there is no guarantee that the OA/ER algorithm will find the global solution. It will be shown later that this difficulty can be overcome by developing a linear model for the master problem. This linear model provides valid outer-approximations to the nonconvex bilinear equations of the splitter, which are used in place of the function linearizations to define the master problem of the OA/ER algorithm.

DISCUSSION

The example problems demonstrated two very important points about MINLP formulations for process synthesis and their solution. Firstly, both problems involve nonconvexities in the model equations which cause the OA/ER master problem to predict invalid lower bounds. Secondly, the linear approximations in the master problem were derived at points which are far from the conditions that would prevail if the disappearing units were selected. In example 1, the master problem failed to provide a valid lower bound since the linearization of the input-output relation for reactor 1 occurred at xl=vl=O (since reactor 1 did not exist in the structure optimized in the NLP subproblem). In example 2, an inherent characteristic of the bilinear functions in the splitter model is that very often the point of linearization is such that one or more of the split fractions (eg. E4, E5, or E6) is equal to 0, hence leading to poor linearizations. These are representative difficulties which can be encountered in solving MINLP process synthesis problems.

One alternative to circumvent these problems is to model splitters so as to avoid zero flows in the superstructure and handle nonconvexities with the two-phase strategy for the OA/ER algorithm (see Kocis and Grossmann, 1988a). In particular, the splitter can be modelled by specifying bounds on the split fractions ^ through the inequalities

$$e \le \xi_i \le y_i(1-2\varepsilon)+e \qquad i\text{»}1,2,\ldots N \qquad (2)$$

where e is t small tolerance (eg. 0.01) and y_t is a binary variable that denotes the existence of a process unit in branch i of a splitter. In this way if *y^O,* the above inequalities reduce to 2^=e, and if *yj*U* the split fraction is bounded a s e £ £ j £ l - & The bounds provided by these inequalities represent a simple means of avoiding linearization at conditions of zero flows and split fractions. However, since the value of $\%_{(}$ can become small as £ approaches zero, the derivative values can also become small, resulting in linearizations which provide poor approximations to the nonlinear functions.

Alternatively, it will be shown that by exploiting the separable structure of the process synthesis MINLP problem and understanding the role of the MHJP master problem of the OA/ER algorithm, a procedure can be developed to increase the reliability of finding the global optimum while greatly reducing the computational expense of solving the NLP subproblems.

SPECIAL STRUCTURE OF THE PROCESS SYNTHESIS MINLP

The superstructure of the MINLP problem has a special feature in that it corresponds to a network of connected nodes. There are two basic types of nodes in this network, process unit nodes (e.g. reactors, columns, compressors) and interconnection nodes (stream splitters and mixers). The arcs in the network represent process streams flowing from one node to another. The process equipment nodes can be thought of as forming subsystems which are linked together by the interconnection nodes to form the superstructure (see Figure 3).

To define more specifically the MINLP for the network superstructure, let *UandN* denote the set of process units and interconnection nodes with elements *u* and n, respectively. Also, let *S* denote the set of process streams in the superstructure with elements *s.* Finally, let I^u^ and *OVM* represent the set of input and output streams for process unit *u* and $I^N W$ and O^W represent the set of input and output streams for interconnection node n. Having stated these definitions, consider the MINLP formulation (PF) of a flowsheet superstructure:

$$Z = \min_{z,d,x,y} \sum_{u \in U} \{ c_u y_u + f_u(d_u) \} + \sum_{s \in S} c_s x_s$$

$$\text{so.} \quad \left.\begin{array}{l} h_u(d_u, z_u, x_p, x_q) = 0 \\ g_u(d_u, z_u, x_p, x_q) \le 0 \\ x_p^F - x_p^{F,UP} y_u \le 0 \ , x_p^F \ge 0 \\ d_u - d_u^{UP} y_u \le 0 \ , d_u \ge 0 \end{array}\right\} \quad u \in U, p \in I^{U(u)}, q \in O^{U(u)} \qquad \text{(PF)}$$

$$r_n(d_n, x_p, x_q) = 0 \qquad n \in N, p \in I^{N(n)}, q \in O^{N(n)}$$

$$x_s \in X_s = \{x_s \mid x_s^{LO} \le x_s \le x_s^{UP}\} \qquad s \in S$$

$$d_u \in D_u = \{d_u \mid 0 \le d_u \le d_u^{UP}\} \qquad u \in U$$

$$d_n \in D_n = \{d_n \mid 0 \le d_n \le d_n^{UP}\} \qquad n \in N$$

$$z_u \in Z_u = \{z_u \mid z_u^{LO} \le z_u \le z_u^{UP}\} \qquad u \in U$$

$$y \in Y = \{y \mid y \in \{0,1\}^m, Ey \le e\}$$

The variables in problem (PF) include x_r d_M, z^ and y = {y_{Mf} a€ t/}. x_s is a vector of variables for each stream 5 € 5 (eg. component flowratcs, temperature, pressure, etc.), where x£ denotes the subvector of flowrate components. d_{ll} denotes a vector of decision/sizing variables, Zg denotes a vector of internal/performance variables, for each process unit *u* € *U,* and d^ denotes a vector of decision/sizing variables for each interconnection node. (For example, if process unit *u* is a CSTR, then $\&_u$ would be the reactor volume and z_{tf} the conversion.) Finally, y_u are the binary variables which denote the existence or nonexistence of each process unit *u* in the flowsheet superstructure.

In the objective function of problem (PF) there is a term for each process unit *u* which includes a fixed-charge cost *(c_u) and* a cost term/$_k$ which is a function of the decision/sizing variable d_u. The second part of the objective function represents the purchase cost or sales revenue *(c_s)* for the process streams. Note that this objective function is separable in the process units and in the process streams.

The constraints in MINLP (PF) are partitioned into two sets which are associated with the two types of nodes, process units nodes and interconnection nodes. For each process unit *u* € *U,* the model includes a vector of linear and nonlinear equality and inequality constraints, h_u,g_u,

involving the continuous variables d_{tt}, *%#* and x_s *(s € I^)KJO^U^>)*. In general, linear equations will correspond to component mass balances[1], while the nonlinear equations will correspond to performance (phase equilibrium, conversion relations) and design equations. Also, it is necessary to have linear inequalities for each process unit to insure that the input flowrate to this unit, x£, and its design variables, $d_{l|9}$ are zero if the unit does not exist (i.e. the associated binary variable y_u =* 0). Note that in these constraints, $x£'^{UF}$ and dj-^ are constants that represent upper bounds on these variables when the process unit exists. Finally, for each interconnection node *n € N*, there is a vector of equality constraints, r^, which relates the output streams to the input streams through the decision variables d_r For instance, for the splitter in example 2, the split fractions correspond to d * (E4, E5, Ed) and the linear and nonlinear mass balance equations comprise the constraints r=0 (see Appendix B).

OUTLINE OF MODELLING / DECOMPOSITION STRATEGY

The proposed strategy for solving the MINLP process synthesis problems with the OA/ER algorithm is aimed at reducing the computational effort in solving the NLP subproblems, providing good information to the MRP master problem, and reducing the effect of nonconvcxitics. The basic idea is to exploit the structure of problem (PF) as follows:

1. Interconnection units:
   a. For splitters and mixers for which only a single nonzero outlet and inlet stream is to be chosen, respectively, linear models will be developed to eliminate nonconvex equations for these nodes.
   b. For splitters and mixers for which several nonzero outlet and inlet streams can be selected, respectively, valid outer-approximations will be developed for the MHJP master problem. These will replace linearizations of the nonconvex equations.
2. Process units:
   a. The NLP subproblems will be defined and solved for only the existing units in the selected flowsheet structure. The solution will be used as a basis for deriving linearizations of the existing process units to be included in the master problem.
   b. Linearizations of nonlinear equations for nonexisting process units will be obtained at nonzero flow conditions using a Lagrangian decomposition scheme.

---

[1]Since the OA/ER algorithm is favored by having as many linear constraints as possible, it is assumed that mass balances are formulated in terms of component flowraies rather than compositions.

- **a** Linearizations of all process units will be modified to satisfy the conditions **that** the values of the input and output flow and design variables can be driven to zero when a unit does not exist in the solution to the MRP master problem.

The motivation behind the above scheme is as follows. Interconnection nodes play a critical role in the selection of process configurations and hence, effects of nonconvexities in these nodes must be eliminated by appropriate convexified model equations. In this way, the problem of linearizations in the OA/ER master problem underestimating the nonconvex feasible region of these models and destroying the validity of the predicted bound will be eliminated

As for the process units, the decomposition scheme will lead to the solution of a reduced NLP subproblem and at the same time provide a good point of linearization for the entire superstructure. The nonlinear models for existing units will be linearized at the NLP solution point To avoid linearizing the disappearing process unit models at zero flows, these units wilt be suboptimized to provide good points for linearization in the sense that these points correspond to conditions that are close to the ones that are likely to prevail if the units are selected. Also, all linearizations will be modified to be consistent with zero flow and design variable values when units are not selected.

It should be noted that the justification behind this linearization scheme is that in the master problem of the OA/ER algorithm, nonlinear functions need not be linearized at the same point Furthermore, the linearizations can be modified accordingly to provide valid outer-approximations.

INTERCONNECTION NODES

The interconnection nodes in the flowsheet superstructure are comprised of stream splitters and mixers. The corresponding equations for the interconnection nodes include heat and material balances and these models axe relatively simple as compared to models for process units. Thus, it is possible to draw on physical observations in order to derive simplified models which will either provide an equivalent representation, or a valid outer-approximation of the nonconvex nonlinear model.

First, we address the stream splitter with N output streams. The heat balance implies that the temperature of each outlet stream equals the inlet stream temperature, and hence these equations

do not require special treatment The material balances for the stream splitter may appear to be trivial, but this is only true for the case of an input stream which has fixed composition or contains only a single component For the case of unknown compositions, stream compositions variables, xi could ** defined and set equal to each other for the input stream and output streams. However, these variables must be related to the stream bulk flowrates (F_i) and component flowrates (/*i):

$$\chi_i^j = f_i^j / F_i \qquad j=1,2,...C\ ,\ \ i=1,2,...N \tag{3}$$

It is preferable to avoid such equations since the denominator becomes zero when a bulk flow is zero. Gearly, the above equation can be rearranged through multiplication of both sides by F_{iy} but this introduces a bilinear term.

The same relations in (3) can be described through the use of split fractions £,, i « l ,2,...JV-1, which also leads to a formulation with bilinearities.

$$\begin{aligned} f_i^j &= f_0^j\, \xi_i \qquad j=1,2,...C\ ,\ \ i=1,2,...N-1 \\ f_0^j &= \sum_{i=1}^{N} f_i^j \qquad j=1,2,...C \\ 0 \le \xi_i &\le 1 \qquad i=1,2,...N-1 \end{aligned} \tag{4}$$

where fi_0 denotes the flowrate of componenty in the inlet stream. Example 2 illustrated the use of this model as well as the difficulty which the resulting nonconvexities can cause. These difficulties will be overcome by replacing linearizations with valid outer-approximations which will be derived later in the paper.

SINGLE CHOICE INTERCONNECTION NODES

STREAM SPLITTER MASS BALANCE MODEL

A special case of the stream splitter that occurs very frequently in a flowsheet superstructure is the situation where only one of the outlet streams can be chosen to be nonzero. For example, refer to Figure 4 where one input stream (FQ) is split into 5 output streams (Fj through F_5) which are then sent as input streams to the 5 process units. Consider now that a single choice between the 5 competing process units must be made so that the following constraint applies:

$$Y_1 + Y_2 + Y_3 + Y_4 + Y_5 = 1 \tag{5}$$

where Y_t denotes the existence/nonexistence of process unit L In addition, if a unit does not exist then the corresponding input stream must be 0 (as in problem (PF)):

$$F_i - \rho Y_i \leq 0 \qquad i=1,2,...5$$

$$1^{\wedge}.-0,1 \qquad i«1,2,...5 \tag{6}$$

where p is a valid upper bound. Given an input stream with unknown compositions, it is possible to make use of the binary variables defined to denote the existence of the process units in deriving a linear model for the multicomponent splitter. In general, for a stream splitter with inlet stream F_Q and outlet streams F_x, F_2, ..J^*_N, of which exactly one can exist, the following linear model describes the splitter (where $f\{$ denotes the flowrate of component j in stream i for/=l,2,...C and 1=0,1,2,..JV):

$$F_i = \sum_{j=1}^{C} Yfi \qquad i-0,1,2,..JV \tag{7}$$

$$f_0^j = \sum_{i=1}^{N} j<\{ \qquad y=1,2,...C \tag{8}$$

$$F_i - \rho Y_i \leq 0 \qquad i=1,2,...N \tag{9}$$

$$\sum_{i=1}^{N} Y_i = 1 \tag{10}$$

This model makes use of the binary variables of the process units in a way that the mass balance in the splitter is represented by a selection procedure (i.e. equating the input stream to the output stream which exists). This can be verified by observing the implication of the constraint ££i Y_t=l. Let Y_t denote the binary variable whose value is 1, thus from (9) and the nonnegativity condition for this variable, $F^{\wedge}fC$. Equation (7) in turn implies that /f=0 for i> / and/=l,2,...C. Finally, from equation (8),/$_0^{\cdot}$=/$_i^{y}$ for y=l,2,...C.

MIXER HEAT BALANCE MODEL

A similar line of reasoning can be applied to the stream mixer with a minor variation to * account for an additional complication which arises. In the mixer, the mass balance equations are linear while the heat balance involves nonlinearities. Let F_i and T_i for ż=l ,2,.JV denote the bulk flowrates and temperatures of the N input streams and F_o and T_o denote the outlet stream flowratc and temperature in the following model:

$$F_i = \sum_{j=1}^{C} f_i^j \qquad i«0,1,2,..JV \tag{11}$$

$$f_0^j = \sum_{i=1}^{N} f_i^j \qquad >-1.2_f...C \tag{12}$$

$$F_0 Cp_0 T_0 = \sum_{i=1} F_i Cp_i T_i \tag{13}$$

where *Cpi* is the heat capacity of stream i. Equation (13) is nonconvex since it contains N+l bilinear terms, products of *F* and *T*.

Consider a mixer with precisely one nonzero input stream, the analogy of the splitter with one nonzero outlet stream (refer to Figure 4). Again let I denote a single stream from Z=l,2,..JV which exists (i.e. F_i ^ *j=Q)* in which case (13) reduces to:

$$F_0 Cp_0 T_0 = F_I Cp_I T_I \tag{14}$$

Since only one inlet stream exists, it follows that $F_Q = Fj$ and also $Cp_Q = Cp_f$. In this case (14) can be reduced further to yield $T_Q = Tj$. Thus, the nonlinear heat balance relation can be replaced by a linear relation that equates the temperature of the mixer outlet stream to the temperature of the existing inlet stream F_7. A linear model for the heat balance of a mixer with a single inlet stream can then be developed as follows:

$$T_0 \geq T_i - \rho\,(1 - Y_i) \qquad i=1,2,...N$$

$$T_0 \leq T_i + \rho\,(1 - r,) \qquad i«1.2,.JV \tag{15}$$

$$\sum_{i=1}^{N} Y_i = 1$$

where *Yj*l* if input stream i exists (and 0 otherwise) and p is a large scalar constant which renders the above inequalities redundant whenever 1^=0. It can be seen that for *Yj^l* the above * inequalities reduce to T_o £ T_f and T_o £ 7_7, which is equivalent to $7_0 = T_r$

The above models in (7>(10) and (15) are extremely useful in the context of the MINLP (PF) for a flowsheet superstructure, because interconnection nodes appear frequently where only one of the N outlet or N inlet streams exists. Potential difficulties for the NLP subproblem and MILP master problem of the OA/ER algorithm are then eliminated by replacing the common nonconvex models composed of bilinear terms with the proposed linear models. For computational efficiency in die MILP problem, it is important to select the smallest possible values for the valid upper bounds p. This will have the effect of tightening the LP relaxation problem.

MULTIPLE CHOICE INTERCONNECTION NODES

Although single choice interconnection nodes treated above appear frequently in a flowsheet superstructure* there is also the need to treat stream splitters and mixers where several nonzero outlet and inlet streams can be chosen, respectively. For instance, refer back to example 2 where one alternative (and actually the optimal structure) made use of two units operating in parallel, the flash separator and the distillation column. Another need for the general stream splitter would be a situation where a stream needs to be split into three streams, one of which will be purged, one is to be recycled, and the third stream is to enter a separation system. These are examples where 2 or more streams leaving a splitter are nonzero and analogous situations exist for the mixer. The procedure for handling multiple choice interconnection nodes is based on replacing linearizations of nonconvex heat and material balances with valid outer-approximations in the MILP master problem of the OA/ER algorithm.

STREAM SPLITTER MASS BALANCE MODEL

First consider the stream splitter, which will be limited to the mass balance equations in (4) since the heat balance can be handled trivially. The nonlinear mass bsdance model for the stream splitter is shown below:

$$f_i^j = f_0^j \xi_i \qquad j=1,2,\ldots C\ ,\ i=1,2,\ldots N-1$$

$$\%^m\%fi \qquad \dot{y}\text{-}1.2,\ldots C \tag{4}$$

$$0 * \wedge * 1 \qquad i»l,2,.JV\text{-}l$$

where ^ is the split fraction for each outlet stream.

A valid outer-approximation of the above model is given by equation (7), the mass balance in

each stream, and by equation (8), the mass balance for each component However, since this relaxation yields a very weak outer-approximation, additional constraints will be developed that maintain the relative order of component flowrates while providing an exact representation at the NLP solution points.

From (4) a difference relation can be derived for each stream i» 1,2,..W-1 which relates the flowrate of component y with that of component y+1 for y s l f 2,..,C-l:

$$f_i^j - f_i^{j+1} = \{ Jl\text{-}f?^X \} \backslash i \qquad 7\text{-}1.2.\text{-}C\text{-}1 \;.\; I\text{-}1.2....AM \tag{16}$$

Assume that the difference relation for component *j* and y+1 in the splitter inlet stream satisfies the following inequality (i.e. the flowrate of component *j* exceeds the flowrate of component y+1):

$$J/ \text{-}*f_0' \quad * 0 \tag{17}$$

Then it can be seen from (16) and (17) that valid lower and upper bounds on the difference relation for components *j* and y+1 in outlet streams i» 1,2,...AM are obtained when ^ lies at its lower and upper bound respectively (i.e. 0 and 1). The following relaxation of the difference relation can then be derived:

$$0 \quad Zfi\text{-}f?^1 \quad * \quad fJ_Q\text{-}ff^l \qquad i = l,2,..JV\text{-}l \tag{18}$$

On the other hand if the difference relation for component./ and;4-1 in the splitter inlet stream satisfies the following inequality:

$$jl \; £j \qquad £0 \tag{19}$$

then a similar relaxation of the difference relation can be obtained:

$$0 \quad a \quad /J\text{-}Zf\text{-}^1 \quad * \quad f^J{}_0\text{-}ff^l \qquad *=l,2,...iV\text{-}l \tag{20}$$

The bounds derived above for the difference relation can be interpreted as a means of enforcing a basic physical phenomenon. For instance in (18), whenever the flowrate of component y exceeds that of component y+1 in the splitter inlet stream (/), the lower bound of 0 on *f{* - / j * 1 insures that the flowrate of component y will exceed that of component y+1 in each outlet stream i. The upper bound insures that the flowrate of component y will not exceed the flowrate of component y+1 by an amount greater than the difference quantity in the inlet stream.

An equivalent interpretation exists in (20) for the case where flowrate of component $\dot{y}+1$ exceeds that of component $\dot{y}$ in the splitter inlet stream. In both situations, an ordering is preserved and allowable differences are established

It is then possible to develop a linear model which provides a valid outer-approximation to the nonconvex splitter mass balance model The model which incorporates the proposed bounds in (18) and (19) requires the use of new binary variables:

$$Y^{j+} = \begin{cases} i & I\ T_0^j / * /_0^{j+1} \qquad j=1,2,\ldots C-1 \\ 0 & otherwise \end{cases} \tag{21}$$

Through the use of these C-1 new binary variables, the following model represents the bounds developed above:

$$\left.\begin{array}{l} -\rho\,(1-Y^{j+}) \le f_i^j - f_i^{j+1} \le f_0^j - f_0^{j+1} + \rho\,(1-Y^{j+}) \\ \rho\, Y^{j+} \ge f_i^j - f_i^{j+1} \ge f_0^j - f_0^{j+1} - \rho\, Y^{j+} \end{array}\right\} \begin{array}{l} i=1,2,\ldots N-1 \\ \dot{y}=1,2,\ldots C-1 \end{array} \tag{22}$$

where one can easily verify that if $\dot{W}+= 1$, the first equation above reduces to:

$$0 \quad S/\dot{J}-/\dot{J}+^1 \quad * \quad \dot{q}\text{-}ff^1 \qquad \dot{i}= 1,2,\ldots AM, \dot{y}=1,2,\ldots C-1 \tag{23}$$

while the second equation becomes redundant Similarly, when $YJ+=Q$, the first equation become redundant and the second equation reduces to (20).

An interesting feature of this linear model occurs in the limiting case when $/\dot{-}_0^{\dot{i}} - //_0^{\bullet 1} = 0$. This is the situation where the flowrates of component $/\dot{}$ and $\dot{y}+1$ entering the stream splitter are equal. The above model then reduces to:

$$\left.\begin{array}{l} -\rho\,(1-Y^{j+}) \le f_i^j - /\,j *^1 * p(l\text{-}YJ\dot{+}) \\ \rho\, Y^{j+} \ge fi\sim fi\dot{+}^l \quad * \quad \sim pYJ+ \end{array}\right\} \begin{array}{l} /=1,2,\ldots AM \\ 7\text{-}1,2\ldots.C\text{-}l \end{array} \tag{24}$$

For $1\wedge=0$ or 1, the above equations reduce to $/j - /I\dot{*}^1 - 0$ for all $j - 1,2,\ldots JV$. Thus, in this limit, the flowrate of component j is forced to equal the flowrate of component $\dot{y}+1$ in each outlet stream i. This corresponds to an exact representation of the distribution of components j and $\dot{y}+1$ in the splitter outlet streams. On the other hand, as the magnitude of $f_0^{\dot{J}} - f_0^{J+^l}$ becomes large, the bounds on $/\dot{j} - /\wedge^1$ become increasingly weak. A scaling procedure can be used to strengthen the bounds in this linear model for cases where the magnitude of $f_0^{\dot{J}} - /\wedge_0^{\dot{}+1}$ is large.

The basic idea in the scaled model is to make use of previous information for the inlet component flowrates in attempt to avoid weak approximations when difference relations have large magnitudes. In particular, consider that K points with nonzero inlet component flows *fi*, for $j=1,2,\ldots C$, $k=1,2,\ldots j$ are given (e.g. from the NLP subproblems). Through the following variation of the model developed above, tighter bounds on f_{i+1} can be derived (see Appendix Q:

$$\left.\begin{aligned} -\rho(1-Y_k^{j+}) &\geq \frac{f_i^{j+1}}{f_{0,k}^{j+1}} - \frac{f_i^{j}}{f_{0,k}^{j}} - \frac{f_0^{j+1}}{f_{0,k}^{j+1}} + \rho(1-Y_k^{j+}) \\ \rho Y_k^{j+} &\geq \frac{f_1^{j}}{f_{0,k}^{j}} - \frac{f_1^{j+1}}{f_{0,k}^{j+1}} \geq \frac{H^{f}t^{l}}{f_{0,k}^{j+1}} - \rho Y_k^{j+} \end{aligned}\right\} \begin{aligned} &i=1,2,\ldots N-1 \\ &j=1,2,\ldots C-1 \\ &k=1,2,\ldots K \end{aligned} \qquad (25)$$

where

$$Y_k^{j+} = \begin{cases} 1 & \text{if } f_0^j / f_{0,k}^j \geq f_0^{j+1} / f_{0,k}^{j+1} \\ 0 & \text{otherwise} \end{cases} \qquad j=1,2,\ldots C-1,\ k=1,2,\ldots K \qquad (26)$$

The inequalities in (25) have the important feature that they provide an exact representation of the splitter when inlet component flowrates are such that the feed composition equals the composition of one of the K scaling points (see in Appendix Q.

The inequalities in (22) and (25), together with the mass balance equations in (7) and (8), are valid outer-approximations that can be used in the master problem in place of the linearization of the nonconvex mass balance equations in (4). There is also the choice of using only the unsealed approximations in (22), or only the scaled approximations in (25). The latter, however, will in general provide tighter approximations since they provide an exact representation of the splitter mass balance equations if inlet compositions are identical to the composition of 1 of the K points $f_{i,k}$ (see Appendix C for an illustrative example). Note that the scale factors for the inequalities in (25) at iteration k are given by the value of nonzero inlet component flowrates in the solution to the preceding NLP subproblem.

EXAMPLE 2 REVISITED

At this point it **is** useful to revisit example 2 to illustrate the model developed above for the **general stream splitter. Recall** that in this problem, the only nonlinearities involved were the bilinear **terms** in **the** stream splitter modeL These nonconvexities caused the linearizations in the master problem to underestimate the nonlinear feasible region which caused the OA/ER algorithm to fail to find the global solution from 3 of the 4 starting points. By replacing the linearizations of the nonconvex splitter model with valid outer-approximation, the OA/ER algorithm is guaranteed to find the global optimum of this MINLP problem.

The results obtained using the scaled outer-approximations in (25) in place of the linearization for the bilinear splitter equations are given in Table II. Notice that regardless of the initial point selected, the OA/ER algorithm converges to the global optimum of $511.87x1(P/yr. Note that to accomplish this desirable feature, the computation effort is increased somewhat First, since the master problem is providing a valid bound, additional iterations are required to reach the termination criterion (2 or 3 iterations versus 1 or 2 iterations when using linearizations in the MILP master problem). Also, the master problem is larger in terms of constraints and number of binary variables, but it contains fewer continuous variables.

The original MINLP formulation involves 2 binary variables and 27 continuous variables in 24 linear constraints, 6 nonlinear constraints, and a linear objective function. If the master problem of the OA/ER algorithm is derived based on function linearizations, then the number of constraints at iteration K is given as: $N_K = 24 + lxK$ (6 linearizations and 1 integer cut constraint). The number of variables in this master problem remains unchanged (27 continuous and 2 binary variables).

When the valid outer-approximations in (25) are used in place of the linearizations the number of constraints in the master problem is: $N_K = 24 + 13xAT$ (12 constraints for the 6 nonlinear equations and 1 integer cut). The number of continuous and binary variables in the master problem at iteration K are given as: #£ * 24 and $N\$ = 2 + K$. Note that 3 continuous variables which appear in the MINLP problem do not appear in this MILP master problem (the split fractions E4, E5, and E6). A single additional binary variable is required at each iteration.

Finally, it should be noted that the inequalities in (22) and/or (25) could be used to solve nonconvex NLP optimization problems for separation systems such as those described in Wehe

and Westerberg (1987) and Floudas (1987). In this case, one would solve an NLP for a given starting point **and** pose the master problem of OA/ER, using die valid outer-approximations, to supply **a** new initial guess. The procedure would be terminated when the lower bound predicted by the master problem exceeds the best NLP solution. Wehe and Wcsterberg (1987) developed an LP-based computational scheme which makes use of similar relaxations that are specific to the separation problem which they address.

MIXER HEAT BALANCE MODEL

A similar strategy can be used to develop an approximate model for the mixer heat balance which is a valid linear outer-approximation to the nonconvex nonlinear model. In this case it will be assumed that each mixer has only two inlet streams. Mixers with N inlet streams are then represented by a succession of N-l two-inlet mixers. Valid lower and upper bounds can be established for the outlet stream temperature T_Q in terms of only the inlet temperatures, T_x and T_2:

$$min\{T_x, T_2) \quad S\ T_0\ S \quad max(T_x, T_2\} \tag{27}$$

The following linear constraints can be used in place of the *min* and *max* operations:

$$T_2 - p(1 - Y_T) \leq r_0\ s\ 7\wedge + pa\text{-}iv) \tag{28}$$

$$Y_T = \begin{cases} 1 & if T \wedge T_2 \\ 0 & otherwise \end{cases}$$

where p is valid bound If $Y_T = Q$ the second constraint becomes redundant and the first constraint reduces to Tj £ $7*_0$ £ T_2. For $Y_T = 1$ the first constraint becomes redundant and the second constraint bounds T_o between T_2 and T_v Thus, the inequalities in (28) provide valid outer-approximations to the outlet temperature in the two-stream mixer.

It is interesting to again examine the performance of the model in (28) for the limiting cases. It can be seen that when $T_l = T_2$ and $r_r = 0$ or 1, (28) reduces to $T_o = T_x = T_2$. However, as the magnitude of T_x - T_2 becomes large, then the lower and upper bounds on T_o become weak and the approximation can perform poorly.

In general, the actual outlet stream temperature is a function of not only the inlet stream

temperatures, but also of die flowrates, and heat capacities. Assuming constant heat capacities, it is possible to develop a linear model which reflects the effect of the stream flowrates as well as stream temperatures, and at the same time provides valid outer-approximations to the nonconvex mixer heat balance equations (see Appendix D for the derivation).

The valid outer-approximations for the mixer heat balance can be embedded in a linear model through the introduction of the following binary variables:

$$Y_{T-Cp} = \begin{cases} 1 & \text{if} \quad T_l Cp_l \wedge T_2 Cp_2 \\ 0 & otherwise \end{cases}$$

$$Y_{F,k} = \begin{cases} 1 & if \quad F_1 / F_0 \geq F_{1,k} / F_{0,k} \\ 0 & otherwise \end{cases} \qquad k=1,2,\ldots K \tag{29}$$

The linear constraints which enforce the correct relation between the mixer outlet stream temperature, *TQ*, and the approximate temperature, T_{Ak}, are given below.

$$\left.\begin{aligned} T_l Cp_l - T_2 Cp_2 &\leq \rho\, Y_{T-Cp} \\ T_x Cp_x - T_2 Cp_2 &\quad 2\ \rho\,(Y_{T-Cp} - 1) \\ \frac{F_1}{F_1} \frac{F_{1k}}{F_{lk}} &\wedge \quad \rho\, Y_{F,k} \\ T_0 &\geq T_{A,k} \sim \rho\,(2 - Y_{T,Cp} - Y_{F,k}) \\ T_0 &\leq T_{A,k} + \rho\,(1 - Y_{T,Cp} + Y_{F,k}) \\ T_0 &\leq T_{A,k} + \rho\,(1 + Y_{T,Cp} - Y_{F,k}) \\ \text{where} \quad T_{A,k} &\ \text{»} \ \frac{F_{1,k}\, C_{P1}\, T_l}{F_{0,k}\, C_{P0}} + \frac{F_{2,k}\, C_{Pl}\, T_2}{F_{0,k}\, C_{P0}} \end{aligned}\right\} k=1,2,\ldots K \tag{30}$$

The first four constraints determine the values of the binary variables $Yj\text{-}c_p$ and $Y_{F,k}$. The remaining constraints activate either the lower or upper bound on $7''_0$ when $T_{A,k}$ provides a valid

underestimation or overcstimation of *TQ*, respectively. An example is presented in Appendix D to illustrate the application of this model.

The model in (30) can then be used to predict valid upper or lower bounds on the mixer outlet stream temperature which can replace the linearization of the nonconvex nonlinear heat balance in the master problem of the OA/ER algorithm. Thus, at each iteration of the OA/ER algorithm, the proposed linear approximations are derived at the point ^ci'^l,*'^,* which is provided by the solution to the NLP subproblem. The linear model in (28) can also be included in the master problem to provide both an upper and lower bound on *TQ*.

PROCESS UNIT NODES

In the previous sections, the special structure of the model equations for the interconnection nodes was exploited in such a way that difficulties introduced by nonconvexities in the associated modelling equations could be eliminated. The key point was that the models which describe the heat and material balances for the interconnection nodes were known in advance and thus, special linear models could be developed The remaining nodes in the flowsheet superstructure network are classified as process unit nodes and the nonlinear modelling equations for these units are not assumed to have any special structure. It will only be assumed that linear component mass balances are specified for each unit.

Example 1 illustrated that disappearing units can cause problems when applying the OA/ER algorithm to an MINLP formulation of a flowsheet superstructure because nonlinear relations describing the disappearing unit are linearized at a point where the corresponding design and flow variables are equal to 0. A second issue, which did not appear significant in this small example, can become very important when applying the OA/ER algorithm to large-scale MINLP problems. At the level of the NLP subproblem, one has to solve the optimization problem for the entire superstructure with process units activated for the particular flowsheet to be analyzed. It would clearly be preferable to optimize only the NLP corresponding to the actual flowsheet of existing units. However, if the disappearing units are not included in the NLP subproblem, then it is not clear at which point the linear approximations for these units are to be derived.

The issues discussed above can be addressed through a decomposition strategy which exploits the separability of problem (PF) with respect to the process unit nodes. Furthermore, a simple but effective scheme will be presented to ensure that linearizations do not prevent flow and

design variables to be driven to zero for disappearing units. The goals of the decomposition scheme axe then to reduce the effort required to solve the NLP subproblems and to improve the quality of the approximation of the MINLP problem provided by MILP master problem, respectively.

To accomplish the above goals, a key property of the OA/ER algorithm that will be exploited is the fact that when deriving the MELP master problem, the linearizations of all functions need not be performed at the same point This follows from the fact that the master problem is based on a primal representation whose outer-approximations can be derived at any point (see Duran and Grossmann, 1986a). Another feature that will be exploited is that when deriving linearizations of process unit equations, the equations of the interconnection nodes need not be satisfied.

In order to perform the desired decomposition, consider a partitioning of the subset of process units, £/, into a subset of existing process units, *UE* for which y_u=*U* and a set of nonexisting process units, *UN* for which y_u*4) (U=UEKJ UN). From (PF), the resulting NLP subproblem for the superstructure is given as:

$$Z \ll \min_{x,d,z} \sum_{u \in UE} \left(c_u + f_u(d_u) \right) + \sum_{s \in S} c_M x_s \qquad (31)$$

$$\begin{array}{lll}
s.t. & \left.\begin{array}{l} h_u(d_u, z_u, x_p, x_q) = 0 \\ g_u(d_u, z_u, x_p, x_q) \le 0 \end{array}\right\} & u \in U, p \in I^{U(u)}, qe \quad O^{U(u)} \\
& 0 \le x_p^F \le x_p^{F,UP}, 0 \le d_u \le d_u^{UP} & u \in UE, p \in I^{UE(u)} \\
& xf=0, d_u \gg 0 & u€ \ UN, te \ I^{UN(u)} \\
& r_n(d_n, x_p, x_q) = 0 & n \in N, p \in I^{N(n)}, q \in O^{N(n)} \\
& x_s e X_s, d_u e \quad D_u, d_H e \quad D_H, z_u e Z_u & seS, ueU, neN
\end{array}$$

where xf corresponds to the stream flowrates in the superstructure that are inputs to the nonexisting units. Since these units do not affect the performance of the existing flowsheet structure, the NLP subproblem can be reduced to include the modelling equations (h=0 and g £0]) and variables (d,z) for only the existing process units. The optimization of the current flowsheet structure for a given assignment of binary variables can then be performed by solving the following reduced NLP subproblem.

$$Z = \min_{x,d,z} \sum_{mmUS} \{ c_u + f_u(d_u) \} + \sum_{\ll\ll *} c_s x_s \qquad (32)$$

$$\left.\begin{array}{ll} S.t. & h_u(d_u, z_u, x_p, x_q) = 0 \\ & g_u(d_u, z_u, x_p, x_q) \le 0 \\ & OSx_p^F \le x_p^{F,UP} \\ & 0 \pounds d_u \le d_u^{UP} \end{array}\right\} \quad u \in UE, p \in I^{UE(u)}, q \in O^{UE(u)}$$

$$xf = 0 \qquad ue\ UN_y\ te\ I^{UN(u)}$$

$$r_n(d_n, x_p, x_q) = 0 \qquad n \in N, p \in I^{N(n)}, q \in O^{N(n)}$$

$$x_s \in X,, d_u \in D_{uf}\ d_n \in D_{nf}\ z\wedge \in Z_u \qquad s \in S, u \in UE, n \in N$$

The solution of the reduced NLP subproblem has two important advantages over the solution of the NLP problem for the entire superstructure. Firstly, the reduced NLP leads to a smaller optimization problem. Secondly, by excluding the nonlinear functions of the nonexisting process units, the potential of singularities is greatly reduced. These singularities often arise because nonlinear equations of disappearing units are functions of flow and size variables which are forced to zero, introducing many zero entries in the Jacobian matrix.

The role of the MILP master problem is to identify, from among the remaining alternatives within the superstructure, the new flowsheet structure with the least lower bound on the objective function value. In order for the master problem to select such a structure, linearizations of the nonexisting units as well as the existing units must be included in the master problem. In addition, the quality of the linear approximations is a function of where the linearization is derived, making the selection of the point of linearization very important. For existing units, the logical choice is the optimal point obtained in the NLP subproblem for that flowsheet structure. For the nonexisting units, "good" linearization points can be determined via Lagrangian suboptimization of the disappearing process units as described below.

After solving the NLP subproblem for the existing process units, information is available concerning the optimal flowrates and conditions of the process streams. Furthermore, Lagrange multipliers are also available for the equations (r=0) of the existing interconnection nodes (splitters and mixers). These multipliers reflect the marginal prices of the stream variables (x)

associated with these nodes. As an example, consider the stream mixer shown in Figure 5. Assume that the flow F_2=O since it is the output from a process unit which did not exist in the current flowsheet structure. The component mass balances for the mixer arc given as:

Let *lij* denote the Lagrange multiplier of equation r_j. Thus:

$$\mu_j = -\frac{\delta Z}{\delta_j} \qquad j=1,2,\ldots C \tag{34}$$

For fixed values of the existing streams, (ft and/0 if follows that 8r; = -8/A Hence,

$$\mu_j = \frac{\delta Z}{\delta f_2^j} \qquad j=1,2,\ldots C \tag{35}$$

meaning that Jiy is the price of the flowrate of component y' for inlet stream 2. Similarly, the prices of other variables in x (pressure and temperature) can be determined (see Appendix E). This information can be used as follows to generate good suboptimal operating points for the nonexisting process units which will then be used in deriving linearizations for the MILP master problem.

Since disappearing units, or subsystems, are connected in the superstructure through the interconnection nodes (see Figure 6), Lagrange multipliers are available from the equations r=0. Therefore, a suboptimizarion problem can be formulated for the disappearing process units based on the prices of the variables x at the interconnection nodes. Also, in order for the suboptimization problem to generate nonzero conditions where nonexisting units are "likely" to operate had they existed in the current flowsheet, the input stream variables of the nonexisting subsystems can be set to the optimal values of the input variables of the interconnection nodes. For example, in Figure 6, the variables associated with stream 2 (x_2) can be set equal to the optimal value of XQ.

Denoting by x_t the fixed inlets to the splitter nodes obtained in the solution to the NLP subproblem, the suboptimization problem for the disappearing process units is then given by:

$$z_{mb} \quad \min_{x,d,z} \; c_B + f_u(d_B) \; \cdot \; \sum_{s \in I^{UN(u)}} \bar{L}_{s,u} \wedge - \wedge \sum_{q \in O^{UN(u)}} \bar{L}_{q,u} \wedge, \qquad (36)$$

$$\text{s.t.} \quad \left.\begin{array}{l} h_u(d_u, z_u, x_p, x_q) = 0 \\ g_u(d_u, z_u, x_p, x_q) \le 0 \end{array}\right\} \qquad u \in UN,\; p \in I^{UN(u)},\; q \in O^{UN(u)}$$

$$x_p = x_t \qquad u \in UN,\; p \in I^{UN(u)},\; t \in I^{N(u)}$$

$$x_s \in X_s,\; d_u \in D_u,\; d_n \in D_n,\; z_u \in Z_u \qquad u \in UN,\; s \in O^{UN(u)} \cup Kne\; N$$

This problem provides in general a good estimation of conditions which would prevail if a nonexisting unit was included in the flowsheet structure. Hence, the solution to this NLP problem yields a good point for deriving the linearizations for the MILP master problem. It should also be noted that very often the above problem will decompose into subsystems that can be solved independently. Furthermore, the inequalities $g_M \le 0$ can be relaxed to avoid infeasibility in this optimization problem (see Kocis and Grossmann, 1988a). Finally, for splitters that are pan of the deleted subsystem, inlet streams are split in equal amounts to generate nonzero flows.

Although this suboptimization procedure will in general violate the mass balance equations of the interconnection nodes, recall that the suboptimization procedure is only used to generate points for linearizing the nonexisting process units. Also, it is clear that this decomposition scheme is somewhat similar in nature to multilevel optimization methods that use Lagrange multipliers to decompose separable problems (eg. see Lasdon (1968), McGalliard and Westerberg (1972)). However, there are two very significant differences between these decomposition strategies. First, the proposed suboptimization scheme is used only to determine good points of linearization for deriving the MILP master problem in the OA/ER algorithm. The procedure is not iterative since the goal is not to optimize exactly the nonexisting units, but to estimate the optimal operation of the nonexisting process units. Secondly, values for the marginal prices are provided by the NLP subproblem of the existing flowsheet meaning that their iterative calculation is not required as in a multilevel approach.

The purpose of this suboptimization scheme is primarily to initialize the MILP master problem by providing information for the nonexisting process units. One option is to then perform the suboptimization at only at iteration 1 and thereafter, linearizations are included in the master problem for only the units existing in the flowsheet optimized in each NLP subproblem.

Alternatively, the suboptimizarion procedure can be applied at each iteration of the OA/ER algorithm to derive linearizations of nonexisting process units. The former alternative has been adopted in this work since it has the advantage of reducing the size of the MILP master problem.

As a final point, it is important to understand that in the above scheme, the linearizations for both the existing and nonexisting process units will in general provide good approximations at conditions which prevail when the units exist in the MILP master problem solution. However, for units which are not selected in the master problem, there is no guarantee in general that nonconvex constraint linearizations will be satisfied when the corresponding flow and design variables are set to zero. In order to avoid this potential difficulty, the linearizations can be modified so as to ensure feasibility at zero values for flow and design variables when a process unit does not exist.

Consider first a nonlinear equation /i(d,x)=0 involving only design and flow variables which are related to a single binary variable y. The relaxed linearization of this equation at iteration k will be given by (see Appendix A):

$$I^* (V_d h^T d + V_x h^T x) \quad £ \quad t (V_d h^T d^* + V_x h^T x^*) \tag{37}$$

$$t^k = \begin{cases} -1 & if X^k < 0 \\ +1 & if \backslash^k > 0 \\ 0 & if X^k = 0 \end{cases}$$

where X^k is the Lagrangc multiplier for h and d*,x* are the optimal solution points of the NLP subproblem at iteration k. From (37), it is clear that if the right hand side coefficient is negative then the inequality cannot be satisfied at d=0,x=0. To circumvent this difficulty, the binary variable *y* associated to the existence of nonzero values of d,x can be utilized to eliminate the right hand side term. That is, (37) can be modified as:

$$j^* \{V_d h^T d + V_x h^T x) \quad £ \quad J^* \{V_d h^T d^* + V_x h^T x^*) \; y \tag{38}$$

In this way, if jM), which implies that d=0 and x=0, then (38) is satisfied trivially. Hence, the linearization does not cut-off the zero value solution even if the correspond constraint is

nonconvex.

For the case when the equation *h(djLj)=Q* also involves the performance variables z, a similar modification can be performed based on nonzero bounds *i*^° and TP^F.

$$t^k(\nabla_d h^T d + \nabla_x h^T x + \nabla_z h^T z) \le t^k(\nabla_d h^T d^k + \nabla_x h^T x^k + \nabla_z h^T z^k)\, y + t^k(\nabla_z h^T z^B)(1-y) \qquad (39)$$

where zf= J*f° tf *tdk/di,* < 0
l. z_l^{UP} if *tdhldii* > 0

For y=0, the modified linearization in (39) can be satisfied at d=0 and x=0 for any value of z within its lower and upper bounds. A similar treatment can be applied to the linearizations of nonlinear inequalities #(d,x,z) £ 0 in the MILP master problem of the OA/ER algorithm.

Qualitatively, the significance of the above modified linearization scheme is as follows. If the MILP master problem activates a process unit by setting the corresponding binary variable to one, the linearization is activated to provide an approximation of the performance of this unit On the other hand, if the binary variable is set to zero, the linearization is deactivated since the nonlinear performance equation of the nonexisting process unit becomes irrelevant In this case, linear constraints (e.g. component mass balances, restrictions on flows, sizes, and operating conditions) ensure that basic conditions in the superstructure are satisfied.

EXAMPLE 1 REVISITED

The solution of the MINLP problem in example 1 was shown to present problems for the OA/ER algorithm, GBD, and a branch and bound solution method. The application of the proposed modelling/decomposition scheme in the OA/ER algorithm will now be illustrated by resolving this nonconvex MINLP problem to show that valid bounds can be obtained with this scheme.

It should be noted that since this problem is quite small, the benefit of the decomposition scheme reducing the effort required in solving the NLP subproblems will not be obvious. Since the superstructure involves only single component process streams, the splitter mass balance is linear. Also, heat effects have not been considered, eliminating the need for a heat balance at the

mixer. Therefore, it will not be necessary to make use of the proposed models for single choice intcrconnectioa nodes.

The problem addressed in example 1 was the selection of the minimum cost reactor to produce a desired amount of a given product The problem formulation was given as (EX1) and the global optimum had an objective function value of C0ST**99.24O at (yl*,y2*)=(l f0). Consider the application of the proposed decomposition scheme in solving this problem with the OA/ER algorithm using the same initial point as selected before, (yl ,y2)»(0,1).

Since reactor 1 has not been selected in iteration 1, the feed stream to this unit (xl) and the reactor volume (vl) must be 0. This implies that the reactor outlet, zl, is also zero. The NLP subproblem to be solved at iteration 1 is then given as:

$$\begin{aligned} &min\ COST = 5.5 + 6\,v2 + 5\,x \\ &s.t.\ \ zl = 0.8\ [1 - \exp(-O.4v2)]\ *2 \\ &zl + z2 = 10 \\ &x1 + x2 = x \\ &vl = *0, jd = 0, zl = 0 \\ &*2, z2, v2\ \ Z0 \end{aligned} \tag{40}$$

The solution to this NLP is *COST*= 107.376 at x=x2=15 and v2=4.479 and the Lagrange multiplier for the mixer mass balance (zl +z2= 10) is |i=-7.5.

Having solved the NLP problem for the existing reactor, the next step is to perform the suboptimization of the nonexisting reactor. As in (36), the feed stream for this process unit is fixed at the optimal value of the splitter inlet stream in the above NLP problem (x= 15) and the Lagrange multiplier |i for the mixer mass balance is used to derive a price for the reactor outlet stream (zl). From (36), the resulting suboptimization problem for the nonexisting reactor is then given as:

$$\text{miit } COST = 7.5 + 7\,v1 + 5\,x1 - 7.5\,z1$$

$$s.L \quad z1 \geq 0.9\,[1 - \exp(-X5\,v1)]\,x1$$

$$x1 \leq 15 \qquad (41)$$

$$v1 \leq 10$$

$$x1, z1, v1 \geq 0$$

The solution of the above optimization problem yields $v1=3.957$, $z1=11.633$. The relaxed linearizations in the MILP master problem derived at the solution of the NLP subproblem (40) for the existing reactor, and at the solution of the suboptimization problem (41) for the nonexisting reactor are given then by:

$$z1 \leq 0.776x1 + 0.9333\,v1 - 3.6933 \qquad (42)$$

$$z2 \leq 0.666x2 + 0.800v2 - 3.584$$

Note that through the use of the suboptimization procedure, the above linearizations have been derived at nonzero values for flow and size variables. Thus, one would expect these linearizations to provide good approximations to the nonlinear reactor performance equations at nonzero conditions. However, note that if a reactor is not selected in the master problem, the corresponding volume and feed stream are forced to zero. In this case, the linearizations in (42) cannot be satisfied (i.e. $v1 = x1 = 0$ implies that $z1 \leq -3.6933$).

To avoid the situation where the linearization cuts into the nonlinear feasible region at zero flow and size values, the above linearizations can be modified as in (38) to yield the following linearizations to be included in the OA/ER MILP master problem:

$$z1 \leq 0.776x1 + 0.9333v1 - 3.6933y1 \qquad (43)$$

$$z2 \leq 0.666x2 + 0.800v2 - 3.584y2$$

The solution to the resulting master problem has an objective function value of 95.78 at the point $(y1, y2)=(1,0)$. Thus, the master problem has predicted a valid lower bound on the global solution of the MINLP problem. Also, the values of the binary variables corresponds to the optimal solution. At iteration 2, the solution to the NLP subproblem with $(y1, y2)$ fixed at $(1,0)$

yields an objective function value of *COST**99,240. This solution corresponds to the global optimum of problem (EX1). The master problem at iteration 2 is infeasible since both reactors have been examined, and the OA/ER algorithm terminates.

Thus, by applying the suboptimization scheme and modifying the linearizations to enforce consistency at zero flow and size conditions, the linearizations in the MILP master problem provided good approximations to the nonlinear constraints describing both the existing and nonexisting reactors. Notice that the master problem predicted a very tight lower bound, 98.44, on the global solution of 99.24. Thus, despite the presence of nonconvexities, this master problem predicted a valid lower bound on the global solution to the MINLP problem. As a result, the OA/ER algorithm converged to the global solution.

SUMMARY OF MODELLING/DECOMPOSITION SCHEME

It will be assumed that the synthesis problem is formulated so as to take the form of problem (PF), where preferably most of the constraints should be formulated linearly (e.g. in terms of component mass flowrates rather than compositions). The suggested modelling/decomposition scheme for the OA/ER algorithm can then be summarized as follows:

Step 0 Identify single choice splitters and mixers and replace their mass and energy balances in the equations r=0 in (PF) by the linear constraints (7>(10) and (IS).

Step 1 Set K=l. Select an initial flowsheet through the binary variables *y\, u e U.*
Set $\bar{z}\hat{y}^{s}$ —°°, $\bar{\wedge}u$ = °°*

Step 2 Solve the NLP subproblem for the flowsheet defined by y_u^*=l ,*ue UE* as given by (32) to yield Z^K. If $Z^K < Z_U$ then set $Z_U = Z^K$ and $y_u^* = y_u^K$, *u* € *U.*

Step 3 Based on the multipliers of the existing interconnection nodes and the inlet flows to the splitters, solve the NLP suboptimization problems in (36) to generate "good" points for linearization for nonexisting process units *ue UN.*

Step 4 Set up the MILP master problem as follows:

a) Incorporate the process unit linearizations obtained at Steps 2 and 3 and modify the right hand side coefficients as in equations (38) and (39).

b) Derive the valid outer-approximations for heat and mass balances of multiple choice interconnection nodes as in (7), (8)$_9$ (22), (25), (28), and (30).

Step 5 Solve the MELP master problem to predict the lower bound ZJF and to provide new values for the binary variables, y_u^{*+1}, u € U.
$JfZ£zZ_a$ then STOP. The optimal solution is the flowsheet corresponding to y^*_w u € U with objective function Z_v.
Otherwise go to Step 6.

Step 6 Set K«K+1 and perform Step 2 to solve the next NLP subproblem foryf=l, u e UE.
Then execute Step 4 as follows:

a) Derive linearizations for existing process units at the NLP subproblem solution.

b) Add new outer-approximations for the multiple choice interconnection nodes.

Perform Step 5 to select new binary variable values and to predict the lower bound.
Repeat Step 6 until the stopping criterion is satisfied in Step 5.

It should be noted that in this procedure, the MINLP problem is modelled first in Step 0 so as to try to replace as many of nonlinear splitter and mixer equations by linear constraints as possible. Secondly, a major advantage is that the NLP subproblem at each iteration only requires the optimization of the specified flowsheet (Step 2), and not the optimization of the entire superstructure. Thirdly, the Lagrangian decomposition scheme in Step 3 provides linearizations of the nonexisting process units to initialize the MILP master problem. Lastly, in Step 4, the MELP master problem is formulated such that linearizations ait consistent with zero flow and design variables conditions and bounded performance variable conditions, while incorporating valid outer-approximations for the nonconvex multiple choice interconnection node models.

Even with all the above provisions, there is no rigorous guarantee that the global optimum will be found since no special structure has been assumed for the nonlinear process unit models. However, the proposed procedure significantly increases the likelihood of the OA/ER algorithm converging to the global optimum. Finally, it should be recognized that the proposed procedure can be combined with the two-phase strategy of the OA/ER algorithm for solving general nonconvex MINLP problems.

PROCESS SYNTHESIS EXAMPLE

The proposed modelling/decomposition scheme will be illustrated with a large-scale synthesis problem. This example problem will demonstrate the use of the special models developed for single choice interconnection nodes, the decompositioii/suboptimization scheme, and the modification of linearizations to account for zero flow and size conditions. The use of the proposed linear models for single choice interconnection nodes will reduce greatly the nonlinearity of the MINLP problem, and avoid a significant number of potential nonconvcxities. The suboptimization scheme will be used to initialize the linearizations in the MILP master problem by providing good points for linearizing noncxisting process units. Finally, by modifying the linearizations to deactivate linearization corresponding to a process unit not selected in the master problem (as in (38) and (39)), the problem of linearizations of nonconvex constraints cutting into the nonlinear feasible region will be reduced Comparison with the original OA/ER algorithm will also be presented.

The process chosen for this example is the hydrodealkylation of toluene (HDA) process to produce benzene which is described extensively in Douglas (1988). The problem addressed is the selection of the flowsheet structure and operating conditions that maximize profit. Given a flowsheet superstructure of alternatives, this problem can be formulated as an MINLP problem. The solution of the resulting optimization problem yields the flowsheet with the maximum profit from among the alternatives embedded in the superstructure.

The superstructure selected for this problem is shown in Figure 7. The selection of this superstructure was motivated by a flowsheet design and suggested alternatives from Douglas (1988). The desired reaction in the HDA process is *toluene + hydrogen -» benzene + methane.* An undesired reversible reaction also occurs: *2 benzene* Jj *diphenyl + hydrogen.* The conditions for these gas phase reactions art a pressure of 3.45 MPa (500 psia) and a temperature between 895 and 980 K (1150 and 1300 F). At lower temperatures, the toluene reaction is too slow and at higher temperatures hydrocracking takes place. Also, a ratio of at least 5:1 moles of hydrogen to moles of aromatics is required to prevent coking. Kinetic data for the toluene reaction (see McKetta, 1977) indicates that the reaction is first order in toluene and one-half order in hydrogen. Since hydrogen is present is excess, its concentration can be assumed constant and the rate then reduces to a first-order reaction.

A hydrogen raw material stream is available at a purity of 95% (the remaining *5%* is methane).

A membrane separator can be used to yield a higher purity feed stream by removing methane (note that membrane separation is typically an expensive process). A toluene fresh feed stream is also available. These feed streams are combined with recycle hydrogen and toluene streams which then must be heated before being fed to the reactor. (Not shown in this figure is a heat exchanger (prior to the furnace) which matches the furnace feed stream with the reactor effluent stream following the quench process, so as to reduce the heating requirement in the furnace.) The exothermic reaction can be carried out in a plug flow reactor operating either adiabatically or isothermally (the isothermal reactor is a more expensive piece of equipment due to the need for heat removal). The reactor product stream will contain unreacted hydrogen and toluene as well as the desired benzene product and undesired diphenyl and methane. This stream must be quenched immediately to prevent coking from taking place in the heat exchanger. The stream will be cooled further in order to condense the aromatics which will then be separated from the non-condensable hydrogen and methane in a flash separator (flash #1).

The vapor stream leaving the flash separator contains valuable hydrogen which can be recycled. However, this stream also contains methane since mediane entered the process in the hydrogen feed stream, and is also produced in the toluene reaction. Thus, part of this stream must be purged to avoid accumulation of methane. One possibility contained in the superstructure is to purge a fraction of this recycle stream. Alternatively, a membrane separator can be used to minimize the hydrogen loss in the purge stream. Another alternative in Figure 7 is to treat the flash separator vapor stream in an absorber to recover benzene lost in the flash separator. Toluene feed can be used as the liquid stream in this absorber to avoid introducing an additional component into the liquid separation system.

A portion of the flash separator liquid stream is used to quench the reactor product stream and the remainder is sent to the liquid separation system. Since this stream may contain hydrogen and methane, it is necessary to remove these components using a stabilizing column, or alternatively, a second flash separator (flash #2) operating at a lower pressure than the first flash. The trade-off between the expense of a distillation column and the desired degree of separation is not known at this stage. Having removed the hydrogen and methane, the liquid stream now contains benzene, toluene, and diphenyl.

The benzene product stream is specified to be at least 99.97% benzene, at a production rate of 583 kg-mol/hr. A distillation column is required to yield a product stream of this purity. The

bottom stream leaving the benzene column contains primarily toluene, with a small amount of diphenyl (depending on extent to which the undesired reaction occurs) and possibly some benzene. Prior to recycling the unreacted toluene, diphenyl should be removed The split between toluene and diphenyl is a relatively easy split which can be accomplished in a flash separator (flash #3) or a column. The additional expense of a column may be justified since a high purity diphenyl stream is of value as a by-product

The superstructure for this HDA process was modelled as an MINLP using simplified models (see Douglas 1988). Assuming that the hydrogen concentration in the reactor is constant (resulting in a first-order kinetics), the isothermal plug flow reactor model can be developed. For the adiabadc reactor, the arithmetic average of the inlet and outlet temperatures is used as the reaction temperature. The phase equilibrium relations in the flash separators were based on Raoult's law and vapor pressures were predicted using the Antoine equation. For the columns, Fenske's equation was used to relate the minimum number of trays to the separation factor and Underwood's equation for the minimum reflux ratio. Again, the Antoine equation was used to predict vapor pressures as a function of temperature. The absorber model was developed based on the Kremser equation. The mass balance equations in the membrane separator were simplified by assuming an arithmetic average of inlet and outlet driving forces (difference in partial pressures in the permeate and nonpermeate streams). Finally, compressors were modelled assuming isentropic compression of an ideal gas. Although it is recognized that these models may not be very accurate, they should be adequate to use for the preliminary synthesis stage.

The objective function selected is the maximization of annualized profit which is given as the difference between revenue and annualized cost Revenue is primarily based on the sales of benzene (main product) and diphenyl (by-product). Fuel values are also assigned to purge streams. Costs include raw-material costs, utility costs (electricity, steam for heating, water for cooling), and investment costs for equipment (membrane separators , reactors, distillation columns, compressors). Economies-of-scales can be captured in the investment costs for equipment by using power law correlations, but these introduce nonconvexities into the objective function. Alternatively, by using 0-1 variables, linear fixed-charge cost models can be used to approximate these functions (see Grossmann, 1985). The latter approach was used in this example where coefficients in the fixed-charge cost models were derived based on Gurthrie's correlation. The remaining objective function terms (raw material costs, sales revenues, and

utility costs) are also linear. A summary of the cost data is given in Table HI.

The resulting MINLP optimization problem contains a linear objective function and 678 constraints (607 equations and 71 inequalities), of which 140 are nonlinear equations. The MINLP involves 13 binary variables and 672 continuous variables. The number of nonlinear constraints in the problem has been kept to a minimum through the use of the proposed linear models for the single choice interconnection nodes, and through the use of linear component mass balances. The superstructure contains 8 stream splitters of which 6 are single choice splitters. If the nonlinear mass balance models in (4) were used for all 8 splitters, the formulation would contain 60 additional nonlinear equations.

The MINLP optimization was solved using the proposed modelling/decomposition scheme for the OA/ER algorithm. The NLP subproblems were solved with MINOS (Murtagh and Saunders, 1985), and the MILP master problems were solved with MPSX (IBM, 1979) on and IBM-3083 mainframe. The problem formulation was performed through the modelling system GAMS (Kcndrick and Meeraus, 1985). (At this point, an efficient implementation of the dccomposition/suboptimization scheme has not been fully automated.) The algorithm was applied making use of the proposed suboptimization and linearization modification procedures. The suboptimization was performed only at iteration 1 in order to initialize the linearizations in the master problem. At other iterations, linearizations were derived for only the process units which exist in the NLP subproblem for the corresponding flowsheet For comparison, the OA/ER algorithm (as presented in Kocis and Grossmann, 1987) was also applied without performing the suboptimization of noncxisting process units nor the modification of linearizations as in (38) and (39). In both methods, the special modelling strategy was exploited for the single choice interconnection nodes to eliminate the nonconvex splitter mass balances in (4) and mixer heat balances in (13).

Step 1 of the proposed procedure requires the selection of initial values for the binary variables, which coiresponds to the selection of an initial flowsheet structure. The initial point selected is the flowsheet design developed in Douglas (1988), which is shown in Figure 8. (Note that simultaneous heat integration and optimization as described by Duran and Grossmann (1986) was not applied, although it could be included in this MINLP formulation.) This flowsheet includes the reactor feed pit-heat furnace, the adiabatic reactor, and the first flash separator. A fraction of the flash vapor stream is purged and the remainder comprises the

hydrogen recycle stream. The liquid separation system in this flowsheet includes die three distillation columns (stabilizer, benzene column, and toluene column) with the top product from the toluene column being the toluene recycle stream.

In **Step** 2, die NLP subproblem of this flowsheet structure was solved and the optimal objective function value was a profit of $4814 x lOfyr, which represents a lower bound to the optimal MINLP solution. Since the objective function in this MINLP problem is the maximization of profit, the NLP subproblems provide lower bounds and the master problems predict upper bounds. The nonexisting process units which require subopdmization for Step 3 include both membrane separators, the second and third flash separators, and the absorber (as well as various heat exchangers and compressors). The nonlinear constraints for the existing process units were linearized at the NLP solution point, while the nonexisting process units were linearized at the solution of the subopdmization problems. In setting up the master problem at Step 4, all linearizations were modified to insure feasibility at zero flow and size conditions when a process unit is not selected.

The solution for the MILP master problem (Step 5) predicted a new flowsheet structure (see Figure 9) that had an upper bound of $6074 x KP/yr. Since this value is greater than the current lower bound ($4814 x K^/yr), iteration 2 is performed (Step 6). The NLP subproblem was then solved for the flowsheet in Figure 9 yielding an optimal profit of $5887 x Kp/yr. This value is greater than the lower bound, thus the lower bound is updated to $5887 x 10-Vyr. Linearizations were derived for the existing process units at the NLP subproblem solution point and these linearizations were modified as in (38) and (39). The solution to the second MILP master problem had an objective function value of $5788 x lCP/yr, which is less than the current lower bound ($5887 x lCP/yr), thus satisfying the termination criterion of the OA/ER. Hence, the optimal flowsheet structure (see Figure 9) has a profit of $5887 x lCP/yr. (The word optimal will be used loosely to refer to the best known solution of this MINLP problem. Due to nonconvexities, no guarantee of global optimality is possible.)

The optimal flowsheet has a structure very similar to the initial flowsheet The only structural difference is that the membrane separator has been placed on the methane purge stream. The hydrogen-rich permeate stream also requires a compressor as this stream is to be recycled for further reaction at a pressure of 3.45 MPa. The operation of this flowsheet is quite different than the initial flowsheet structure. The membrane separator reduced significantly the loss of

hydrogen in die purge stream, hence reducing the flowrate of the hydrogen feed stream by 50%. Also, the conversion per pass (62.8%) in this flowsheet is higher than that of the initial flowsheet structure (56.6%).

For comparison, the original version of the OA/ER algorithm was applied with DICOPT (Kocis and Grossmann, 1988b) without performing the suboptimization of nonexisdng units nor the linearization modification scheme. The results in Table IV-a, show the this master problem failed to overestimate the profit at iteration 1 ($4661 x KP/yr). Therefore, the algorithm converged to the suboptimal solution of $4814 x KP/yr. These results can be explained by the fact that nonconvexities are present in the MINLP formulation of this problem, meaning that the OA/ER is not guaranteed to converge to the global optimum. Also, as seen in example 1, linearizations derived for noncxisting process units at zero flow and size conditions can often provide poor approximations to the nonlinear constraints. In addition, linearizations derived at nonzero conditions may violate the zero flow and size conditions which prevail when a process unit is not selected.

Table IV-b contains the results obtained when the proposed suboptimization procedure and linearization deactivation scheme were used. By performing the suboptimization of nonexisting process units, linearizations in the master problem provide a good approximation of the nonlinear performance of the selected process units. The linearization modification scheme allows the linearizations to be deactivated when a process unit is not chosen. Thus, consistency is maintained between the performance of nonexisting process units in the MHJP master problem and the nonlinear performance of nonexisting process units. This results in a master problem which approximates closely the original MINLP problem and increases the likelihood of converging to the global optimum despite the presence of nonconvexities. Finally, note that the total CPU time required with the proposed procedure was only 214.3 seconds (IBM-3083), where the solution of the NLP subproblems required 76.9 seconds and the MILP master problems required 137.4 seconds. (Note that due to current implementation limitations, the NLP subproblems solved correspond to the entire superstructure with nonexisting process units deactivated, rather than the flowsheet of existing units.)

A comparison of the computational effort required to solve the NLP of the entire superstructure versus the NLP for the flowsheet of existing process units (for the first major iteration) is given in Table V. The NLP for the flowsheet is considerably smaller in terms of the

number of **variables** and constraints, and required less than one sixth of the CPU times used to solve the **NLP for** the superstructure. The suboptimization of the nonexisting process units **decomposed into** six NLP problems which together required only 5.57 CPU seconds (IBM-3O83X **The** total time used to solve the NLP of the existing flowsheet and the suboptimization problems for the nonexisting process units **was** 16.66 seconds, which is less than 25% of the CPU time used to solve the NLP of the superstructure.

CONCLUSIONS

This paper has presented a modelling/decomposition scheme that exploits special features in structural flowsheet optimization problems to enhance the performance of the OA/ER algorithm. The proposed procedure reduces the computational effort required to solve large-scale problems and increases the likelihood of converging to the global optimum.

Linear models have been developed for single choice interconnection nodes which replace nonconvex splitter mass balances and mixer heat balances. Valid outer-approximations have also been derived for the nonconvex equations of the multiple choice interconnection nodes. At the level of the NLP subproblem, a procedure has been proposed which allows one to solve the NLP optimization problem for only the existing process flowsheet rather than the entire superstructure. A Lagrangian suboptimization/decomposition scheme has also been developed which has the feature of providing good points for deriving linearizations of nonexisting process units to be included in the MELP master problem. When these are included at only the first major iteration, this scheme also allows to reduce the size of the master problem . Finally, a linearization modification procedure has been proposed to deactivate linearization associated with process units not selected in the master problem. This modification establishes the feasibility of the linearizations at zero flow and size conditions when a process unit does not exist

Process synthesis example problems have been used to illustrate these points. The nonconvex MINLP problem in example 1 was shown to cause difficulties for the OA/ER algorithm, GBD, and a branch and bound method. With the suboptimization procedure, coupled with the linearization modification scheme, the modified OA/ER algorithm was shown to converge to the global solution. The nonconvex splitter mass balance equations in example 2 caused the OA/ER algorithm to converge to a suboptimal solution from 3 of 4 initial points. The use of the valid

outer-approximations, derived for the multiple choice interconnection nodes, in place of linearizations in the modified OA/ER master problem led to the global solution of this problem firom each of the 4 initial points- Finally, the combination of effective modelling, the suboptimizatioo/decomposition scheme, and the linearization modification procedure was demonstrated through the solution of a large-scale MINLP formulation for the HDA process synthesis problem. Efforts are currently underway to automate the proposed strategy in a flowsheet synthesis package.

ACKNOWLEDGMENTS

The authors would like to acknowledge financial support from the National Science Foundation under Grant CPE-8351237 and partial support firom the Engineering Design Research Center at Carnegie Mellon.

APPENDIX A. OUTER-APPROXIMATION/EQUALITY-RELAXATION

The step* in die outer-approximation/equality relaxation algorithm for solving problem MINLP **can** be stated as follows assuming that the NLP subproblems in Step 2 have a feasible solution!

Step 1 Select initial binary assignment y^1, set K=l.
Initialize lower and upper bounds, Z^a-«« Z_U=∞.

Step 2 Solve (NLI*) for fixed y* in (MINLP). This problem yields $Z(y^K)$, x^K, and X^K.
If ZCyK)^, then set y^*-y^K, x^*-x^K, and Zu«$Z(y^K)$.
Define die diagonal direction matrix T^K as:

$$t_{ii}^K = \begin{cases} -1 \text{ if } \lambda_i^K < 0 \\ +1 \text{ if } \lambda_i^K > 0 \\ \text{Oi/Xf=O} \end{cases} \qquad i=1,2,\ldots r$$

where X_i^* are the Lagrange multipliers for the nonlinear equations tij(x)=O, i=l,2..J.

Step 3 Derive at x^K die linear approximations for f(x), h(x), and g(x) as follows and set up die master program given by problem (M^K).

$$\begin{aligned} s.t.\ & \left.\begin{aligned} & (w^k)^T x - \mu \le w_0^k \\ & T^k R^k x \le T^k r^k \\ & S^k x \le s^k \end{aligned}\right\} \quad k=1,2\ldots K \\ & Ax=a \\ & By+Cx\wedge d \\ & \sum_{i \in N^k} y_i \le |B^k|-1 \quad k=1,2\ldots K \\ & x \in X,\ y \in Y,\ \mu \in R^1 \end{aligned} \qquad (M^K)$$

$$w^k = \nabla f(x^k) \qquad w_0^k = \nabla f(x^k)^T [x^k] - f(x^k)$$

$$R^* \text{ » } Vh(x^*)^r \qquad r^* = Vh(x^*)^r [x^*]$$

$$S^k = \nabla g(x^k)^T \qquad s^k = \nabla g(x^k)^T [x^k] - g(x^k)$$

The objective function value z£ is the predicted lower bound at iteration K, and *i* is the largest linear approximation to the nonlinear objective function. The index sets in the integer cut constraints are such that for any integer combination y*, $B^k=\{j:y_j^k=1\}$ and $N^k=\{j:y_j^k=0\}$.

Step 4 Solve the master program (M^K):

[a] If a solution y^K+* exists with objective value Z^<Z_U; set K=K+1, go to **Step** 2.

[b] If Z££ZJJ or no feasible solution exists, stop. Optimal solution is Zy at y*,x*.

APPENDIX B. MINLP FORMULATION OF EXAMPLE PROBLEM 2

```
MAX MVDIUI - 35 F1A • 30 F2B - 10 Fl - 8 F2 - F4A - F4B
             - 4 F5A -  4 F5B - 2 YF - 50 YD

MIXER 1          F3A  -  0.55 Fl  •  0.50 F2
                 F3B  -  0.45 Fl  +  0.50 F2

SPLITTER         F4A  -  E4 F3A
                 F4B  -  E4 F3B
                 F5A  »  E5 F3A
                 F5B  -  E5 F3B
                 F6A  *  E6 F3A
                 F6B  -  E6 F3B
                 F7A  -  F3A  -  F4A  -  F5A  -  F6A
                 F7B  -  F3B  -  F4B  -  F5B  -  F6B

FLASH            F8A  -  0.85 F4A
                 F8B  -  0.20 F4B
                 F9A  *  0.15 F4A
                 F9B  -  0.80 F4B

DISTILLATION     F10A  -  0.975 F5A
                 F10B  *  0.050 F5B
                 F11A  *  0.025 F5A
                 F11B  -  0.950 F5B

MIXER 2          F1A  *  F8A  ±  F10A  +  F6A
                 P1B  -  F8B  ±  F10B  +  F6B

MIXER 3          P2A  *  F9A  +  F11A  +  F7A
                 P2B  -  F9B  +  F11B  +  F7B

LOGICAL          F4A  +  F4B  >m  2.5 YF
                 F4A  +  F4B  <m  25. YF
                 F5A  +  F5B  >m  2.5 YD
                 F5A  +  F5B  <"  25. YD

SPECIFICATIONS   P1A  >-  4. P1B
                 P2B  >-  3. P2A
                 P1A  +  P1B  <a  15.
                 P2A  +  P2B  <·  18.

BOUNDS           E4 , E5 , E6  <»  1.0
                 Fl , F2  <-  25.
                 YD , YF  -  0 , 1
```

APPENDIX C. DERIVATION OF THE SCALED OUTER-APPROXIMATIONS FOR THE MULTIPLE CHOICE SPLITTER MASS BALANCE

The nonlinear constraints which describe the general stream splitter mass balances were given before as:

$$f_i = f \xi_i \quad ;-1.2,\ldots C \quad , \quad /-1.2\ldots AM \qquad \text{(C-l)}$$

where ^ is the split fraction for outlet stream i. This constraint can be written as:

$$\frac{f_i}{f} = \frac{f\%}{y} \quad ;=1.2,\ldots C \quad , \quad i-1.2\ldots AM \qquad \text{(C-2)}$$

by dividing both sides by the quantity $f_{i,k}$ (assuming this quantity is nonzero). In the same manner as before, a difference relation can be derived for each stream i=l,2,.JV-l which relates the flowrate of component ;' with that of component ;+l for y* 1,2,...C-l. This difference will be denoted as a scaled difference because it is based on the above scaled relation.

$$f_i \quad «+l \qquad P \quad I^{*1}$$

Assume that the scaled difference relation for component j andy'+l in the splitter inlet stream satisfies the following inequality:

$$\frac{4}{f^{j}_{0,k}} - \frac{\wedge}{f^{j+1}_{0,k}} \wedge 0 \qquad \text{(C-4)}$$

Then it can be seen that valid lower and upper bounds on the scaled difference relation for components,/ and/+l in outlet streams i=l,2,..JV-l are obtained when ^ lies at its lower and upper bound respectively (Le. 0 and 1). The following relaxation of the scaled difference relation can then be derived:

$$0 \; £ \; \frac{f_i}{f^{j}_{0,k}} - \frac{f_{i+i}}{f^{j+l}_{0,k}} \; * \; \frac{f^{s}}{f_i} - \frac{f^{j+1}}{f^{J+l}} \% \qquad »=l,2,\ldots iV-l \qquad \text{(C-5)}$$

Similar inequalities apply when the component flowrates in the splitter feed stream are such that:

$$\frac{f_i}{f_{0,k}} - \frac{f_M}{f_{0,k}^{j+1}} \le 0 \qquad (C\text{-}6)$$

The valid inequalities for the scaled model (presented in the section Multiple Choice Interconnection Nodes) are then given as:

$$\left.\begin{aligned} -\rho(1-Y_k^{j+}) &\le \frac{f_i^j}{f_{0,k}^j} - \frac{f_i^{j+1}}{f_{0,k}^{j+1}} \le \frac{f_0^j}{f_{0,k}^j} - \frac{f_0^{j+1}}{f_{0,k}^{j+1}} + \rho(1-Y_k^{j+}) \\ \rho Y_k^{j+} &\ge \frac{f_i^j}{f_{0,k}^j} - \frac{f_i^{j+1}}{f_{0,k}^{j+1}} \ge \frac{f_0^j}{f_{0,k}^j} - \frac{f_0^{j+1}}{f_{0,k}^{j+1}} - \rho Y_k^{j+} \end{aligned}\right\} \begin{aligned} &i=1,2,\ldots N-1 \\ &j=1,2,\ldots C-1 \\ &k=1,2,\ldots K \end{aligned} \qquad (C\text{-}7)$$

where

$$Y_k^{j+} = \begin{cases} 1 & \text{if } f_0^j / f_{0,k}^j \ge f_0^{j+1} / f_{0,k}^{j+1} \\ 0 & \text{otherwise} \end{cases} \qquad j=1,2,\ldots C-1\ ,\ k=1,2,\ldots K \qquad (C\text{-}8)$$

It was assumed, in deriving these inequalities, that the scale factors $f_{0,k}^j$ are nonzero. Since these coefficients are given by the splitter inlet component flowrates at the solution to NLP subproblem k, the value of the scale factors can be 0. In this case, the scaled difference relation for this component flowrate and its neighbors (i.e. component $j-1$ and $j+1$) can be derived using an arbitrary value for the scale factor (e.g. 1.), without destroying the validity of the inequalities.

It was stated previously that the scaled difference relations in (C-7) will provide an exact representation of the stream splitter if the scale factors are such that the composition of 1 of the K points equals the composition of the splitter inlet stream. One can verify that if:

$$\frac{f_i^j}{f_{0,k}^j} = \frac{f_0^{j+1}}{f_{0,k}^{j+1}} \qquad j=1,2,\ldots C-1 \qquad (C\text{-}9)$$

then for y^equal 0 or 1, the model in (C-7) reduces to:

$$0 = \frac{f_i^j}{f_{0,k}^j} - \frac{f_i^{j+1}}{f_{0,k}^{j+1}} \qquad j=1,2,\ldots C-1\ ,\ i=1,2,\ldots N-1 \qquad (C\text{-}10)$$

which insures that all components C in each of the N outlet streams have the same composition

as the inlet stream.

In order to clarify the use of the valid outer-approximations for the stream splitter (both the unsealed and scaled difference relations), consider the following examples. For simplicity, assume that an inlet stream (F_0A) containing 2 components (A and B) is to be split into 2 outlet streams (F_1 and F_2). Using the unsealed model and selecting a value of p=10 as an upper bound, the splitter would be represented in the NOLP master problem as follows:

$$-10(1-Y^{A+}) \le f_1^A - f_1^B \quad £ \quad /_0^* - /_0^* \quad +10(1-Y^{A+})$$

$$io\ Y^{A*} \quad a\ /_1^* - /_1^* \quad a\ /_0^* - /_0^* \ -10\ Y^{*+} \qquad (C-11)$$

$$Y^{A+} = \begin{cases} i & V\ {}_0f^{**}ff \\ 0 & otherwise \end{cases}$$

Let the splitter inlet component flowrates be f_0^A=5.5 ,$/_0^*$=4.5 so that $Y^{A+}=l$ and the above inequalities reduce to:

$$0 \quad * /_1^* - /_1^* \quad * \quad 1 \qquad (C-12)$$

$$10 \quad £ \ f_1^A - f_1^B \ Z \quad 1 - 10 \qquad \text{(redundant)}$$

Note that the exact nonlinear relationship between f_1^A and f_1^B would maintain that the composition of outlet stream 1 is 55% *A* which lead to:

$$/_1^A = 1.222/_1^* \qquad (C-13)$$

Figure C-l shows the comparison between the exact relation (C-13) and the approximate model (C-12). Note that the exact relation is linear due to the fact that the splitter inlet stream component flowrates have been given fixed values. The figure shows that the unsealed difference relations provide a good approximation to the exact splitter model. This is true because the difference between the component flowrates in the inlet stream was small,

$J_\backslash \quad J_\backslash$

If the component flowrates of the splitter inlet stream are f_0^A=9 ,$/_0^B$ = l, then the linear inequalities for the unsealed difference relations are:

$$0 \quad \wedge // * - /_1^* \quad * \quad 8 \qquad (C-14)$$

$$10 \quad Zf_1^A - f_1^B \quad £ \quad 8-10 \qquad \text{(redundant)}$$

The exact nonlinear relationship for these inlet component flowrates is:

$$f_1^A = 9\, f_1^B \qquad (C\text{-}15)$$

Figure C-2 **shows** the comparison between the exact relation (C-15) and the unsealed approximate model (C-14). This figure shows that the unsealed difference relations provide a weak approximation to the exact splitter model since the difference between the component flowrates in the inlet stream was large.

The scaled model can be used to provide a tighter approximation in such cases. Assume that at iteration k, the actual inlet flows are $f_{0.1}^A = 8$, $f_{0.1}^* = 2$, which are then used as scale factors. The scaled difference is then 0.62S (9/8-1/2) which is positive forcing $Y^A + = l$. The linear approximations from the scaled difference relations become:

$$0 \quad Z f_1^A l\% - f_1^* l2 \quad £ \quad 0.625 \qquad (C\text{-}16)$$

$$10 \quad * f_1^A / 8 - f_1^* / 2 \quad 2 \quad 0.625 - 10 \qquad \text{(redundant)}$$

The second constraint is redundant and the first can be rearranged through multiplication by 8 as:

$$0 \quad £ f_1^* - 4 f_1^* \quad £ \quad 5 \qquad (C\text{-}17)$$

Figure C-2 illustrates the relation between these scaled inequalities and the exact splitter model in (C-15). It is clear that the scaled version of the difference relation model gives a much tighter approximation to the actual stream splitter model than the unsealed model. This will generally be the case whenever the scaling reduces the magnitude of the difference in the splitter inlet component flowrates with respect to the unsealed difference. (Recall that the scaled difference was 0.625 as compared to an unsealed difference of 8.) On the other hand, the scaling procedure can yield a weaker approximation when the opposite situation occurs. For example, if the scale factors are $f_{0.1}^A = 0.5$, $f_{0.1}^* = 9.5$, then the scaled difference is 17.895 (9/0.5 -1/9.5). In this case, the unsealed relation would provide a tighter approximation. Thus, the model which yields the tightest approximation to the nonconvex splitter model, while providing a valid outer-approximation, is a combination of the unsealed and scaled difference relations. At iteration K of the OA/ER algorithm, the MILP master problem would contain the inequalities of the unsealed model and K sets of inequalities derived at the K values for the scale factors (as given by the solution points of the K NLP subproblems).

APPENDIX D. DERIVATION OF VALID OUTER-APPROXIMATIONS FOR MULTIPLE CHOICE MIXER HEAT BALANCE

Consider a stream mixer with 2 nonzero inlet streams (a mixer with N inlet streams can **be treated as N-l 2-stream mixers), Fl and *F2*, which enter the mixer at 7*1** and 77, respectively. **The outlet** stream temperature can be calculated **as** follows:

$$- \quad \frac{F_x\, Cp_x\, T_x}{{}_0 Cp_0} \quad \frac{F_2 Cp_2 T_2}{F_0\, Cp_0} \qquad (D\text{–}1)$$

Assuming that Cp_4 are constants, the above relation is nonlinear in FQ, $F_{l\$}$ F_2, T_v and T_2. Let T_{Ak} denote an approximation of T_o which is given by **the** following linear equation:

$$T_{A,k} \quad m \frac{F_{hk} CP\backslash^{T}\backslash}{F_{Q,k} C_{P0}} + \frac{F_{lk} CP2^{T}2}{F_{0,k} C_{P0}} \qquad (D\text{–}2)$$

where F_{ft} ^ Fi ^ and F_5 ^ are constants.

Based on (D-l) and (D-2), a difference relation between T_o and $r_{A,k}$ can be derived:

$$T \quad T \quad - \frac{T_1 Cp_1}{CPo} \quad \frac{F_1}{{}^{1}\ H)} \quad \frac{F_{1,k}}{F_{0,k'}} \quad \frac{T_2 Cp_2}{{}^{c}P0} \quad \frac{F_2}{{}^{1}\ F_0} - \frac{F_{2,k}}{F_{0,k}} \} \qquad (D\text{–}3)$$

Substituting F_o - F_x for F_2 and F_{Ok} - F_{lk} for $F_{2,k}$ yields:

$$T_0 - T_{A,k} = \frac{T_1 Cp_1}{Cp_0} \left\{ \frac{F_1}{F_0} - \frac{F_{1,k}}{F_{0,k}} \right\} + \frac{T_2 Cp_2}{Cp_0} \left\{ \frac{F_{1,k}}{F_{0,k}} - \frac{F_1}{F_0} \right\}$$

which can be rearranged as:

$$T_0 - T_{A,k} = \left\{ \frac{T_1 Cp_1}{Cp_0} - \frac{T_2 Cp_2}{Cp_0} \right\} \quad \left\{ {}^{F}\backslash - \frac{F_{\backslash,k}}{F_{0,k}} \right\} \qquad (D\text{–}4)$$

Let r^1 and F^2 denote the the 2 bracketed tenns in (D-4) and rearrange the above equation as:

$$7b = r4.* + n\, r^{2} \qquad \textbf{(D-5)}$$

One can then determine the relationship between the actual outlet temperature, T_o, and the

approximate value, T_{Ak}, by examining the sign of the quantities F^1 and f^2. For example, if both r^1 and r^2 are positive (or negative) then their product is also positive and T_o £ T_{At} In this case, the following inequality provides a valid lower bound on T_o:

$$T_0 \geq \frac{F_{1,k} Cp_1 T_1}{F_{0,k} Cp_0} + \frac{F_{2,k} Cp_2 T_2}{F_{0,k} Cp_0} \qquad (D\text{-}6)$$

On the other hand, if one T is positive and the other is negative, then T_Q £ $T_{A,k}$ and a valid upper bound on T_o results.

The valid outer-approximations fOT the mixer heat balance can be embedded in a linear model through the introduction of the following binary variables:

$$Y_{T-Cp} = \begin{cases} 1 & if \quad T_x c_{Pl} t T_2 c_{Pl} \\ 0 & otherwise \end{cases} \qquad (P\text{-}l)$$

$$Y_{F,k} = \begin{cases} 1 & if \quad F_1 / F_0 \geq F_{1,k} / F_{0,k} \\ 0 & otherwise \end{cases} \qquad *=1,2,...AT$$

The linear constraints which enforce the correct relation between the mixer outlet stream temperature, TQ, and the approximate temperature, T_{Ak}, are given below.

$$\left.\begin{aligned}
T_l Cp_l - T_2 Cp_2 &\leq \rho Y_{T-Cp} \\
T_l Cp_l - T_2 Cp_2 &* \rho (Y_{T-Cp} - 1) \\
\frac{F_l}{F_0} \quad \frac{F_{l.k}}{F_{0,k}} &<, \quad \rho Y_{F,k} \\
\frac{F_l}{\wedge 0} \quad \frac{F_{lk}}{F_{0,k}} & \quad (Y_{F,k} - 1) \\
T_0 &\geq T_{A,k} - \rho (Y_{T,Cp} + Y_{F,k}) \\
T_0 &\geq T_{A,k} - \rho (2 - Y_{T,Cp} - Y_{F,k}) \\
T_0 &\leq T_{A,k} + \rho (1 - Y_{T,Cp} + Y_{F,k}) \\
T_0 &\leq T_{A,k} + \rho (1 + Y_{T,Cp} - Y_{F,k})
\end{aligned}\right\} \qquad \begin{aligned} &(0\text{-}8) \\ &k=1,2,...K \end{aligned}$$

The first four constraints in (D-8) maintain the definitions of the binary variables

$^{Y}T\text{-}Cp$ **** *V,* • ^^ remaining constraints activate either the lower or upper bound on T_o when $T_{A,k}$ provides a valid underestimation or overestimate of *TQ*, respectively.

To clarify the application of the linear heat balance model in (D-8) (also (30)), consider a simplified case where $Cp\$=Cp_x\text{-}Cp$^ Also, assume that K= 1 and $Fj_{,l}=F_{2\ t}=F_0 j/2$. In this case, $T_{A,x}=(Tj+7_2)/2$, meaning that the approximate outlet stream temperature is given by the arithmetic average of the inlet stream temperatures. The linear model derived from the single point K= 1 is given as:

$$
\begin{aligned}
&{}^{r}1 \text{"} {}^{r}2 \ * \ P^{Y}T\text{-}Cp \\
&T_1 - T_2 \geq \rho\,(Y_{T-Cp} - 1) \\
&\frac{F_1}{F_0} - \frac{1}{2} \leq \rho\, Y_{F,1} \\
&\frac{F_1}{F_0} - \frac{1}{2} \geq \rho\,(Y_{F,1} - 1) \qquad (D\text{-}9) \\
&T_0 \geq T_{A,1} - \rho\,(Y_{T,Cp} + Y_{F,1}) \\
&T_0 \geq T_{A,1} - \rho\,(2 - Y_{T,Cp} - Y_{F,1}) \\
&r_0 \leq T_{A,1} + \rho\,(1 - Y_{T,Cp} + Y_{F,1}) \\
&T_0 \leq T_{A,1} + \rho\,(1 + Y_{T,Cp} - Y_{F,1})
\end{aligned}
$$

If the situation occurs such that Tj ^ T_2 and F_X/F_Q ^ 1/2, then the value of the binary variables must be *Yj-Cp^F^^* Physically, this means that stream 1 is the hotter of the 2 streams and that, relative to the base point (where $F_t=F_2$), the flowrate of stream F_t is the larger of the 2 inlet streams. Intuitively, one would then expect the temperature of the outlet stream to exceed the arithmetic average of the inlet streams. Referring to the linear model, the only bound on 7Q which is activated when *Yj-cp^Yp* ^ = 1 is:

$$T_0 \geq T_{A,1} - \rho\,(2 - Y_{T,Cp} - Y_{F,1}) \qquad (D\text{-}10)$$

which reduces to 7_0 * T_{AV}

APPENDIX E. DERIVATION OF SUBOPTIMIZATION PRICES FROM INTERCONNECTION NODE LAGRANGE MULTIPLIERS

The relation between the Lagrange multiplier for the mixer mass balance equation and the marginal price of die component flowrate was given in the Process Unit Nodes section. In order to apply the suboptimization procedure, it is also necessary to determine marginal prices for the remaining components of the stream variable x (eg. temperature and pressure) associated with the disappearing process units. This information can be extracted from the Lagrange multipliers of the corresponding equations of the interconnection nodes as shown below.

First consider the stream mixer for which the marginal price of the component flowrates has already been established. The heat balance for the mixer was presented previously as:

$$r^{HB} = F_0 Cp_0 T_0 - \sum_{i=1}^{N} F\wedge PJ\wedge O \qquad (£\text{-}1)$$

The Lagrange multiplier for this equation can be interpreted as:

$$\mu^{HB} = -\frac{\delta Z}{\delta r^{HB}} \qquad (E\text{-}2)$$

For fixed values of the AM mixer inlet temperatures (T_i) and the outlet temperature (7Q), as well as fixed values of all N inlet flowrates (F_i) and the outlet flowrate (FQ), if follows that $\delta r^{HB} = -FjCpfiTj$ (heat capacities^/?,*, arc assumed to be constant). Thus,

$$\mu^{HB} = \frac{\delta Z}{F_I Cp_I \delta T_I} \qquad (E\text{-}3)$$

which can be rearranged as:

$$\mu^{HB} \; F_I Cp_I = \frac{\delta Z}{\delta T_I} \qquad (E\text{-}4)$$

where Tj denotes the 1 inlet temperature that is not fixed. In this way, the marginal price of this variable can be determined from the Lagrange multiplier of the heat balance equation.

Finally, the marginal price of the stream pressure for an inlet stream / can be derived from the Lagrange multipler of the following equation:

$$r/L/>_0 - />_1 = 0 \qquad i»1,2,..JV \qquad (£\text{-}5)$$

since for fixed P_Q, Srf= -8P,.. The Lagrangc multiplier can then be interpreted as:

$$\mu_i^P = \frac{}{\delta P_i} \qquad i=1,2,\ldots N \qquad (E\text{–}6)$$

Marginal prices can also be determined for the component flowrates, temperature, and pressure of the stream splitter outlet streams. Beginning with the component flowrate, consider the overall component mass balance equation for the stream splitter.

$$r_j^{MB} = f_0^j - \sum_{i=1}^{N} f_i^j = 0 \qquad J\text{-}1.2.\text{-}.C \qquad (£\text{-}7)$$

For fixed values of AM outlet component flowrates (f_i^j) and inlet component flowrate (f_0^j), the following relations must hold:

$$\delta r_j^{MB} = -\delta f_i^j \qquad \rightarrow$$

$$\mu_j^{MB} = \frac{\delta Z}{\delta f_i^j} \qquad j=1,2,\ldots C \qquad (E\text{–}8)$$

where/-$_i^i$ denotes the component flowrate which is not being fixed.

The heat balance and pressure relation equations for the stream splitter have the same form as the pressure relation equation of the stream mixer.

$$rf\text{-}P_0\text{-}P_i \sim 0 \qquad 1 = 1,2,\ldots N \qquad (£\text{-}9)$$

$$rf\text{-}rn\text{-}Tj\text{-}O \qquad J\text{-}1.2.\ldots.N$$

As before, for fixed P_o and T_o, it follows that 8r/$^>$=-5P$_I$- and δV^-ST^. The Lagrange multiplier can then be interpreted as:

$$\mu_i^P = \frac{**}{\delta P_i} \qquad \text{»}=1,2,\ldots N \qquad (£\text{-}10)$$

$$\mu_i^T = \frac{\delta Z}{\delta T_i} \qquad i=1,2,\ldots N$$

References

[Andiecovich 85] Andrecovich, M. J., Westeiberg, A. W.
A Simple Synthesis Method Based on Utility Bounding for Heat-Integrated Distillation Sequences.
AIChE Journal 31(9): 1461-1474,1985.

[Benders 62] Benders, J. F.
Partitioning Procedures for Solving Mixed-variables Programming Problems.
NumerischeMathematik 4:238-252,1962.

[Cerda 83] Cerda, J., Westerberg, A.W.
Synthesizing Heat Exchanger Networks Having Restricted Stream/Stream Matches Using Transportation Problem Formulations.
Chemical Engineering Science 38:1723-1740,1983.

[Crowder 83] Crowder, H., Johnson, E. L., Padberg, M.
Solving Large-Scale Zero-One Linear Programming Problems.
Operations Research 31(5):803-834,1983.

[Douglas 88] Douglas, J. M.
Conceptual Design of Chemical Processes.
McGraw-Hill, New York, 1988.

[Drud 85] Drud, A.
Alternative Model Formulations in Nonlinear Programming - Some Disastrous Results.
Operations Research 33(l):218-222,1985.

[Duran 6a] Duran, M. A., Grossmann, L E.
An Outer-Approximation Algorithm for a Class of Mixed-Integer Nonlinear Programs.
Mathematical Programming (36):307-339,1986a.

[Duran 6b] Duran, M. A.; Grossmann, I. E.
Simultaneous Optimization and Heat Integration of Chemical Processes.
AIChE Journal 32(l):l23-m$_y$ 1986b.

[Floquet 88] Floquet, P.$_9$ Pibouleau, L., and Domenech, S.
Mathematical Programming Tools for Chemical Engineering Process Design Synthesis.
Chemical Engineering and Processing 23(2):99,1988.

[Floudas 86] Floudas, C. A., Ciric, A. R., Grossmann, I. E.
Automatic Synthesis of Heat Exchanger Networks.
*AIChE Journal*32(2):276-290,1986.

[Floudas 87] Floudas, C. A.
Separation Synthesis of Multicomponent Feed Streams into Multicomponent Product Streams.
AIChE Journal 33(4):540-550,1987.

[Gcoffrion 72] Geoffnon, A, M.
Generalized Benders Decomposition.
***Journal Optimization Theory and Applications* 10(4), 1972.**

[Grossmann **85]** Grossmann, L E.
Mixed-Integer Programming Approach for **the** Synthesis of Integrated Process **Flowsheets.**
***Computers and Chemical Engineering* 9(5):463-482,1985.**

[Han 77] Han, S. P.
A Globally Convergent Method for Nonlinear Programming.
***Journal Optimization Theory and Control* 22:297,1977.**

[IBM 79] IBM.
IBM Mathematical Programming System Extended 1370 (MPSX1370), Basic ReferenceManual.
Technical Report, IBM, White Plains, NY, 1979.

[Karmarkar 84] Karmarkar, N.
A New Polynomial-Time Algorithm for Linear Programming.
***Combinatorica* 4(4), 1984.**

[Kcndrick85] Kendrick, D., Meeraus, A.
GAMS,AnIntroduction.
Technical Report, Development and Research Department at the World Bank, Washington, DC, 1985.

[Kocis 87] Kocis, G. R., Grossmann, I. E.
Relaxation Strategy for the Structural Optimization of Process Flowsheets.
***Industrial and Engineering Chemistry Research* 26(9): 1869-1880,1987.**

[Kocis 8a] Kocis, G. R., Grossmann, I. E.
Global Optimization of Nonconvex MINLP Problems in Process Synthesis.
1988a.
Accepted for publication in Industrial and Engineering Chemistry Research, 1988.

[Kocis 8b] Kocis, G. R., Grossmann, I. E.
Computational Experience with DICOPT Solving MINLP Problems in Process Systems Engineering.
1988b.
Accepted for publication in Computers and Chemical Engineering, 1988.

[Lasdon68] Lasdon, L. S.
Duality and Decomposition in Mathematical Programming.
***IEEE Transactions Systems Science Cybernetics* 4(2):86-100,1968.**

[Mahalcc 77] Mahalec, V.; Motard, R. L.
Evolutionary Search for an Optimal Limiting Process Flowsheet.
***Computers and Chemical Engineering* 1,1977.**

[Martin 85] Martin, K., Schrage, L.
Subset Coefficient Reduction CUts for 0/1 Mixed-Integer Programming.
Operations Research 33(3):505-526,1985.

[Mawengkang 86] Mawcngkang, H., Murtagh, B. A.
Solving Nonlinear Integer Programs with Large-Scale Optimization Software.
Annals cf Operations Research 5:425-437,1986.

[Mawengkang 88] Mawengkang, H.
Nonlinear Integer Programming.
PhD thesis, The University of New South Wales, 1988.

[McGalliard 72] McGalliard, R. L., Westerberg, A. W.
Structural Sensitivity Analysis in Design Synthesis.
Chemical Engineering Journal 4:127-138,1972.

[McKetta 77] McKetta, J.J.
Encyclopedia of Chemical Processing and Design.
Dekker, New York, 1977.

[Murtagh 85] Murtagh, B. A., Saunders, M. A.
MINOS User's Guide.
Technical Report SOL 83-20, Systems Optimization Laboratory, Department of Operations Research, Stanford University, 1985.

[Papoulias 83] Papoulias, S., Grossmann, I. E.
A Structural Optimization Approach in Process Synthesis, Parts I, II, and HI.
Computers and Chemical Engineering 7(6), 1983.

[Powell 77] Powell, M. J. D.
A Fast Algorithm for Nonlinearly Constrained Optimization Calculations.
1977.
presented at Dundee Conference on Numerical Analysis.

[Rudd73] Rudd, D. F.; Powers, G. J.; Siirola, J. J.
Process Synthesis.
Prentice-Hall, 1973.

[Vanroy 83] Van Roy, T. J., Wolsey, L. A.
Valid Inequalities for Mixed 0-1 Programs.
Discrete Appl. Math. 4:199-213,1983.

[Vanroy 87] Van Roy, T. J., Wolsey, L. A.
Solving Mixed Integer Programs by Automatic Reformulation.
Operations Research 35:45-57,1987.

[Wehe 87] Wehe, R. R., Westerberg, A. W.
An Algorithmic Procedure for the Synthesis of Distillation Sequences with Bypass.
Computers and Chemical Engineering ll(6):619-627,1987.

Table L Results of Applying OA/ER to Example 2

ITERATION		**1**	**2**	
INITIAL POINT				SOLUTION
YD=O,YF=O	NLP	0		**0**
	MILP	infeasible		
YD=1, YF=O	NLP	477.88	488.43	**488.43**
	MILP	665.87	479.85	
YD=O, YF=1	NLP	488.43		488.43
	MILP	487.61		
YD=1, **YF=1**	NLP	511.87		511.87*
	MILP	482.69		

* denotes the optimal MINLP solution

Table IL Results of Solving Example 2 with OA/ER Using Valid Outer-Approximations

ITERATION		1	2	3	
INITIAL POINT					SOLUTION
YD=0,YF=O	NLP	0	511.87	488.43	511.87*
	MILP	562.88	546.41	478.93	
YD=1,YF=O	NLP	477.88	488.43	511.87	511.87*
	MILP	546.31	512.03	0	
YD=0,YF=l	NLP	488.43	511.87		511.87*
	MILP	521.87	478.93		
YD=1,YF=1	NLP	511.87	488.43		511.87*
	MILP	546.41	478.93		

* denotes die optimal MINLP solution

Table m. Cost Data for HDA Problem

Feedstock or Product/Byproduct		**Cost/Price** ($/kg-mole)
Hydrogen Feed	95% Hydrogen 5% Methane	2.50
Toluene Feed	100% Toluene	14.00
Benzene Product	£ 99.97% Benzene	19.90
Diphenyl Product		11.84
Hydrogen Purge	(heating value)	1.08
Methane Purge	(heating value)	3.37

Utilities	**Costs**
Electricity	$0.04/kW-hr
Heating (steam)	***S&.Otl&V***
Cooling (water)	**$0.7/10^6 kJ**
Fuel	$4.0/100 kJ

Investment Costs *(Vfityr)*	Fixed-Charge Cost	Linear Coefficent
Absorber	13.0	1.2 x number of trays 3.0 x vapor flowrate
Compressor	7.155	0.815 x brake horsepower (kw)
Stabilizing Column	1.126	0.375 x number of trays
Benzene Column	16.3	1.55 x number of trays
Toluene Column	3.90	1.12 x number of trays
Furnace	6.20	1.172 x heat duty (10^9kj/yr)
Membrane Separator	43.24	49.0 x inlet flowrate
Reactor (adiabatic)	74.3	1.257 x reactor volume (m^3)
Reactor (isothermal)	92.875	1.571 x reactor volume (m^3)

Table IV. Results of the OA/ER Algorithm for HDA Problem

Without Suboptimization and Lineariation Modification

INITIAL POINT	ITERATION	1	2
		(10^3\$/yr)	
y^1	NLP	4814.	
	MILP	4661.	

With Suboptimization and Lineariation Modification

INITIAL POINT	ITERATION	1	2
		(lOH/yr)	
y^1	NLP	4814.	5887.
	MILP	6074.	5788.

Table V. Comparison of Computational Effort in NLP for Superstructure vs. Flowsheet

	SUPERSTRUCTURE	FLOWSHEET
EQUATIONS	678	386
CONTINUOUS VARIABLES	672	375
CPU SEC (IBM-3083)	67.77	11.09
SUBOPTIMIZATION OF NONEXISTING UNITS		
CPU SEC[1]		5.57
TOTAL CPU SEC	67.77	16.66

[1]Suboptimization of nonexisting units decomposed into 6 optimization problems.

Figure 1. Superstructure for Example 1

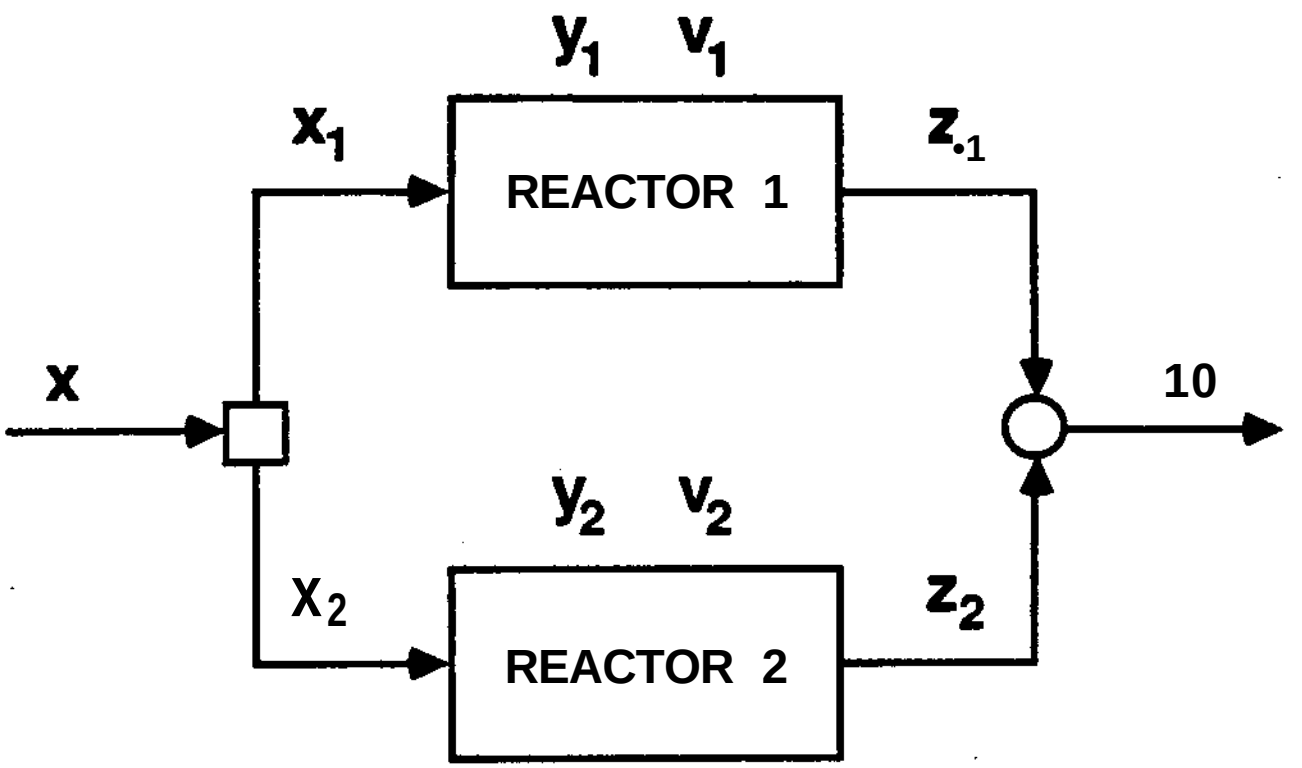

Figure 2-a. Superstructure for Example 2

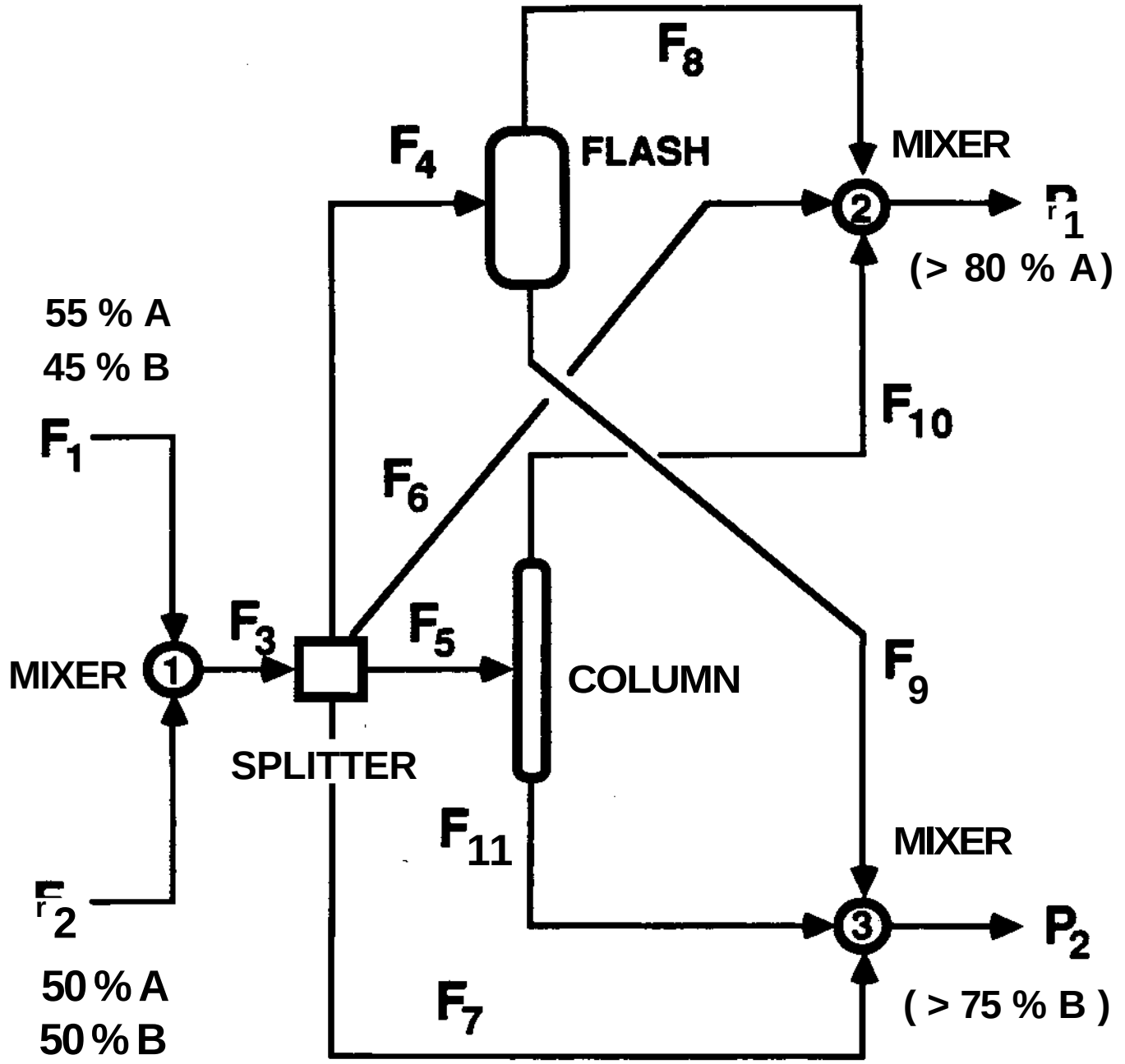

Figure 2-b. Optimal Separation Scheme

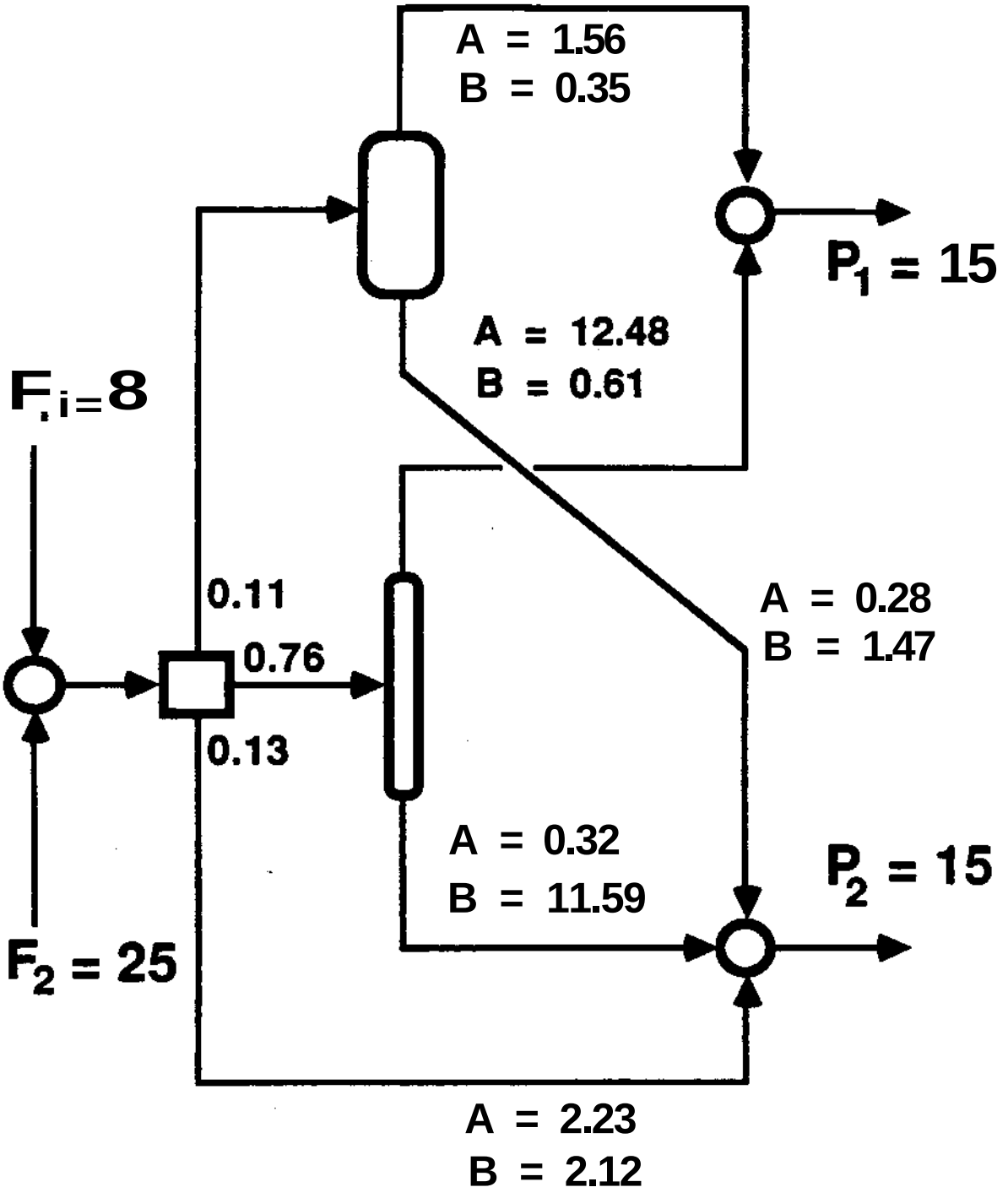

Figure 3. Special Structure of Flowsheet Superstructure

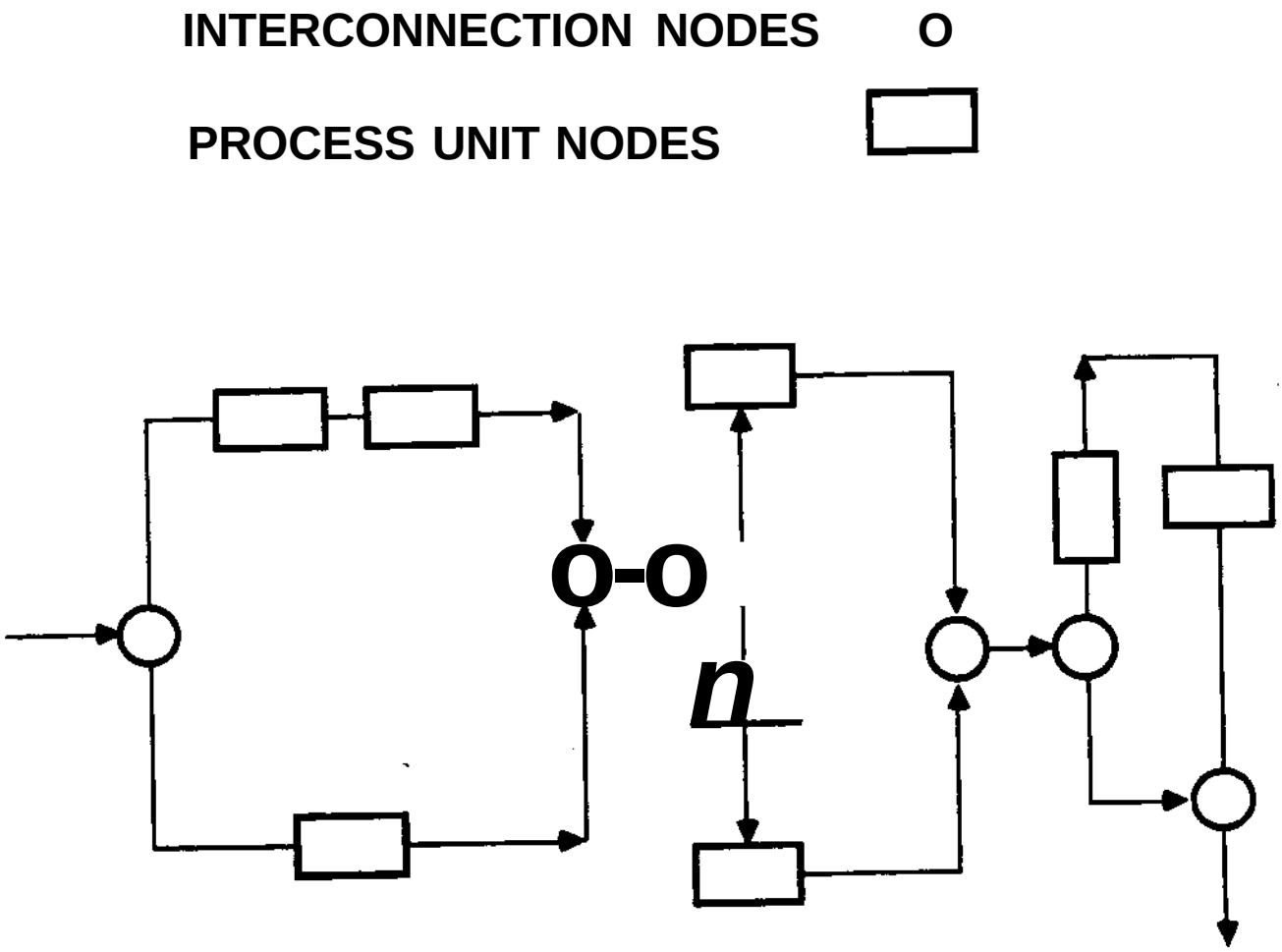

Figure 4. Example of Special Class of Interconnection Node

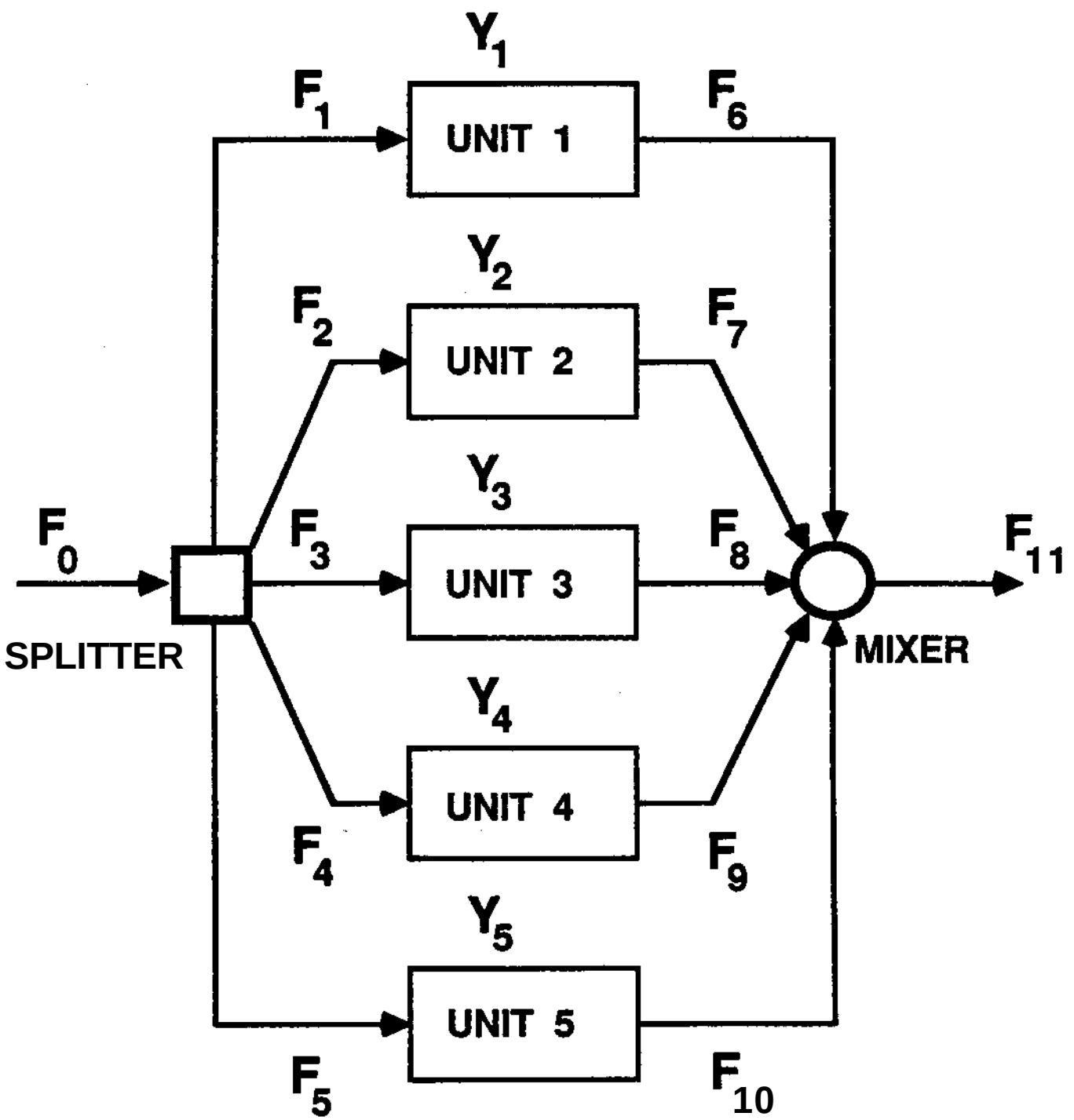

Figure 5. Role of Interconnection Node in Suboptimization

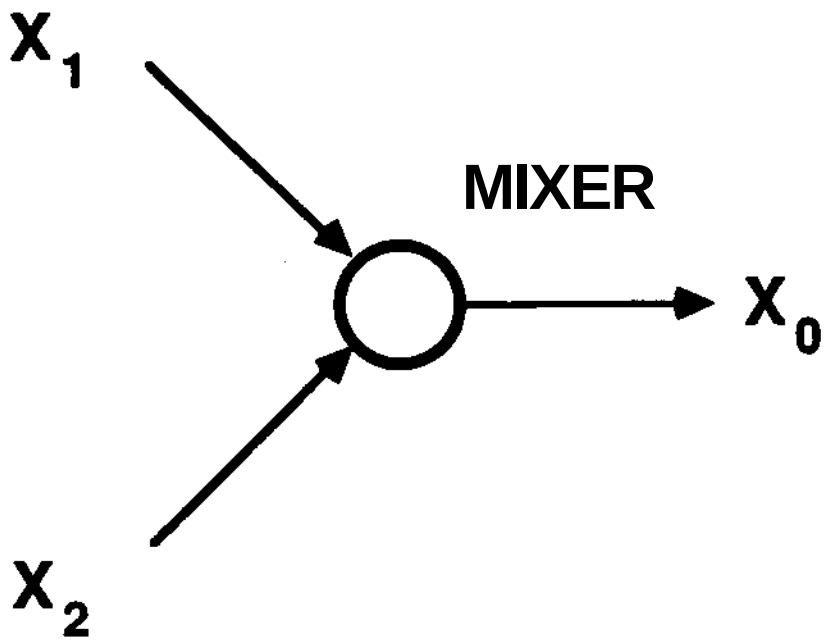

X; = (F j Tj F? fj) 1 = 0 , 1 , 2 j = i , 2 , . . . c

Figure 6. Suboptimization of Disappearing Process Units

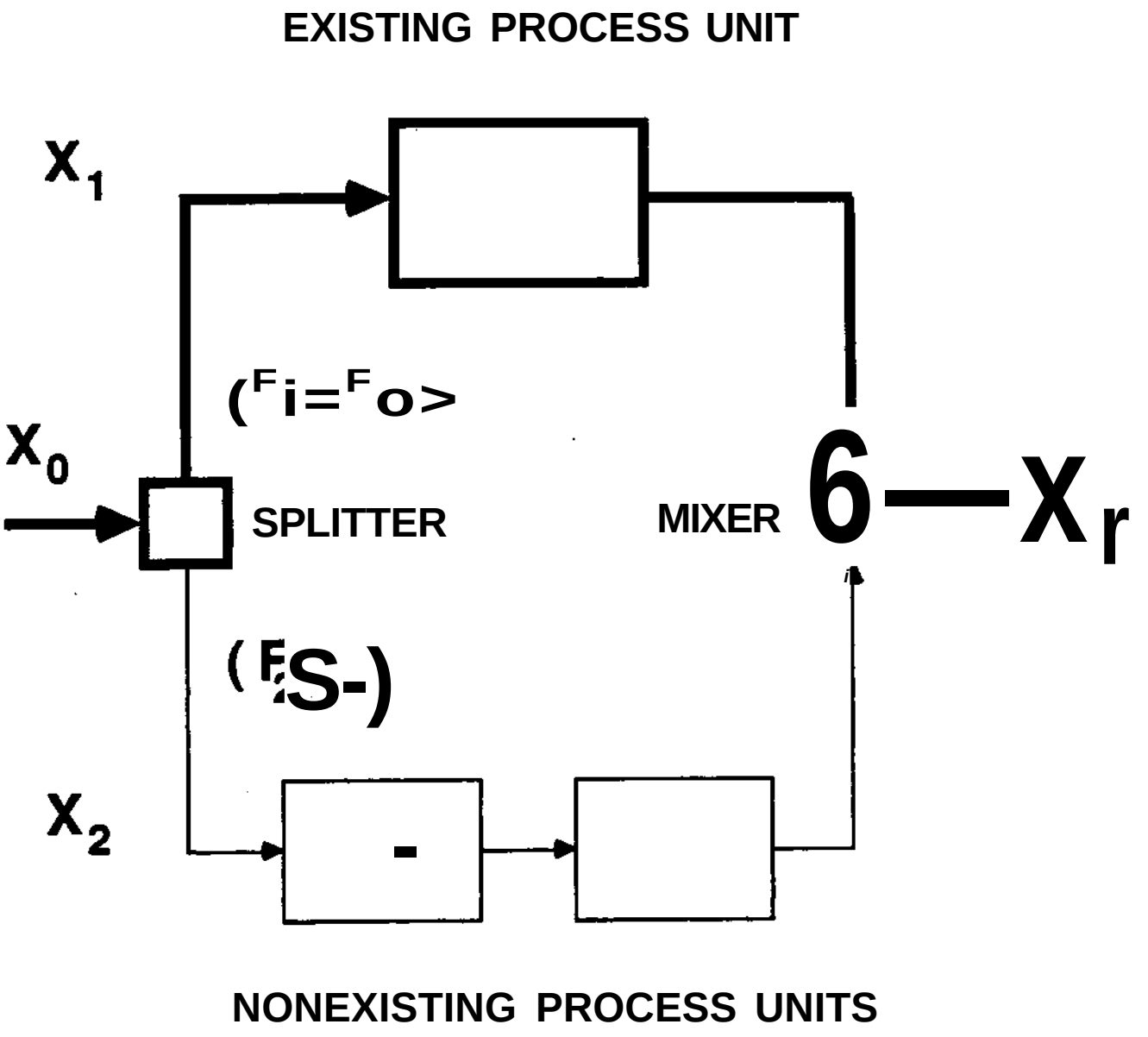

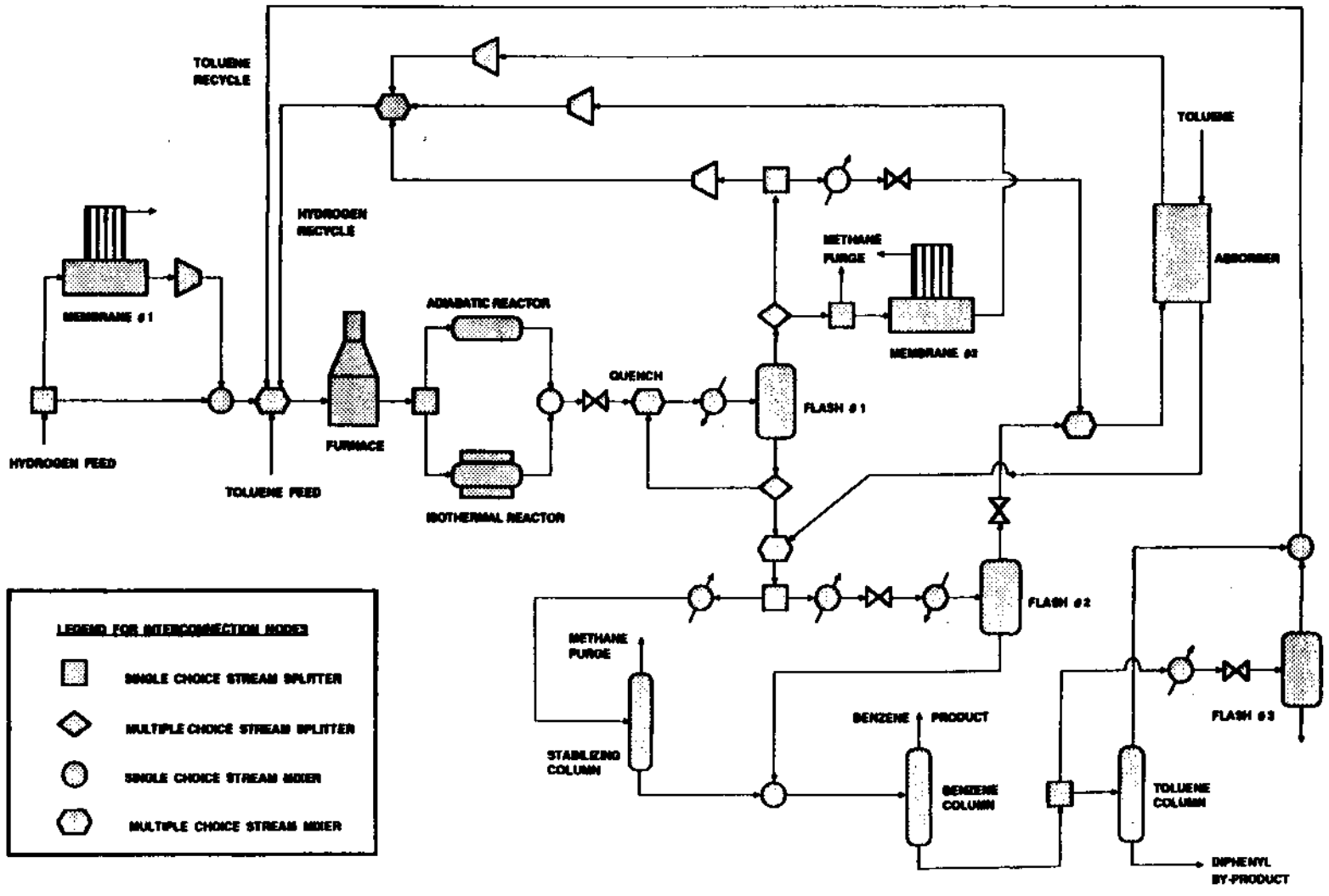

Figure 7. Superstructure for HDA Process Synthesis Problem

3 @ 3 . Flowsheet 1 S ed as In 9 l 3 t

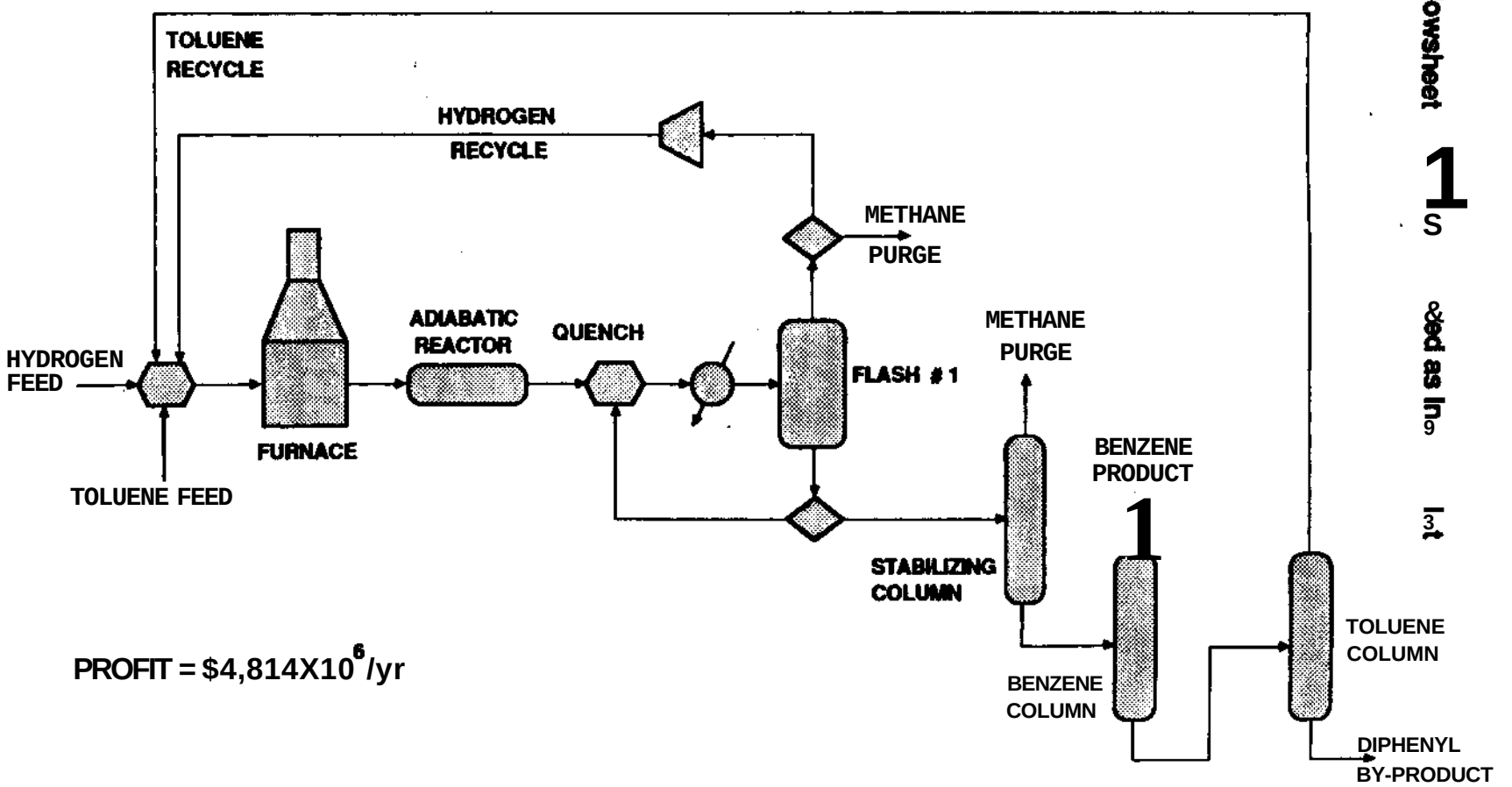

PROFIT = $4,814X10^{6}/yr

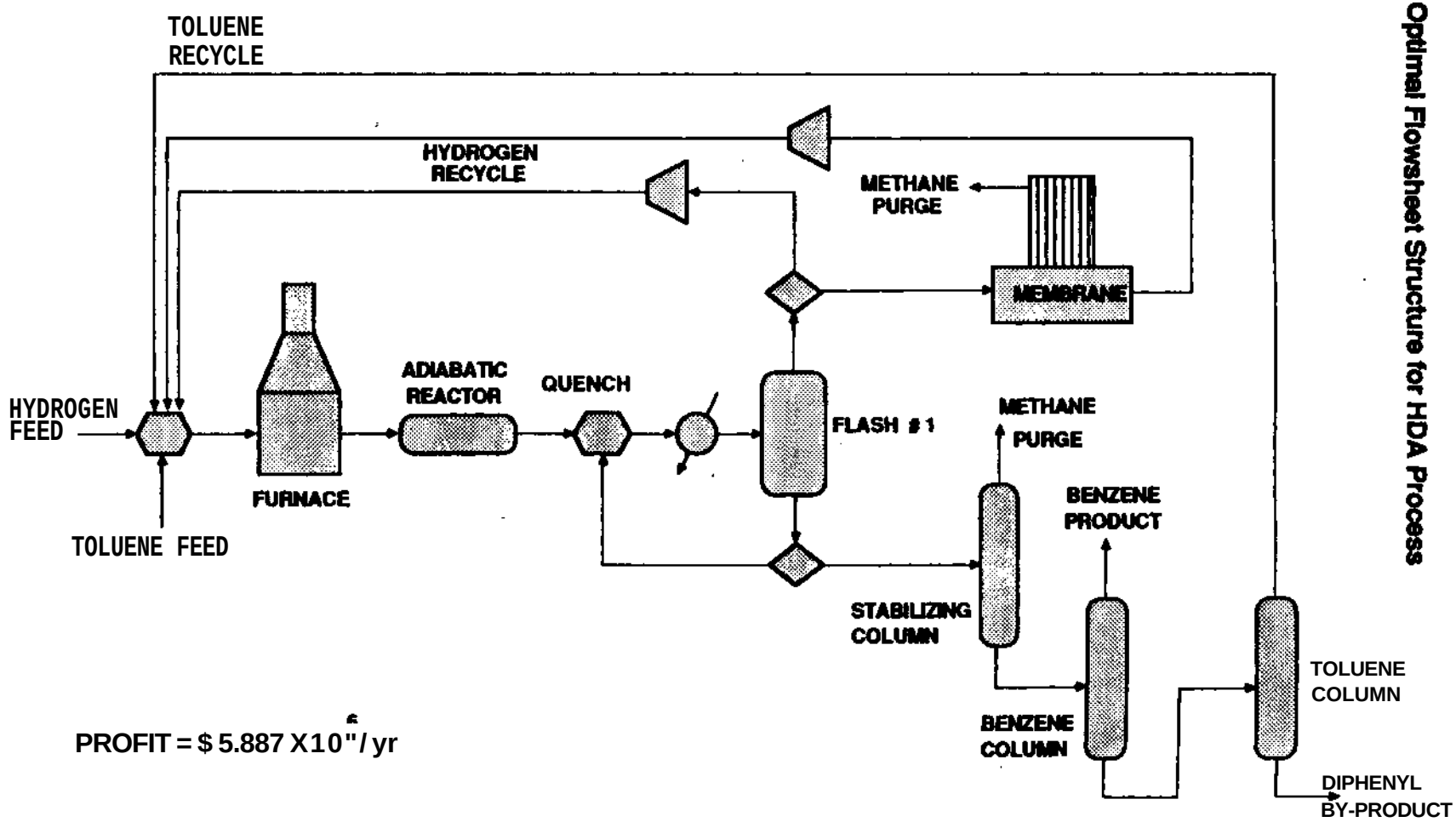

Figure 9. Optimal Flowsheet Structure for HDA Process

Figure C-1. Unsealed Difference Relation (5.5,4.5)

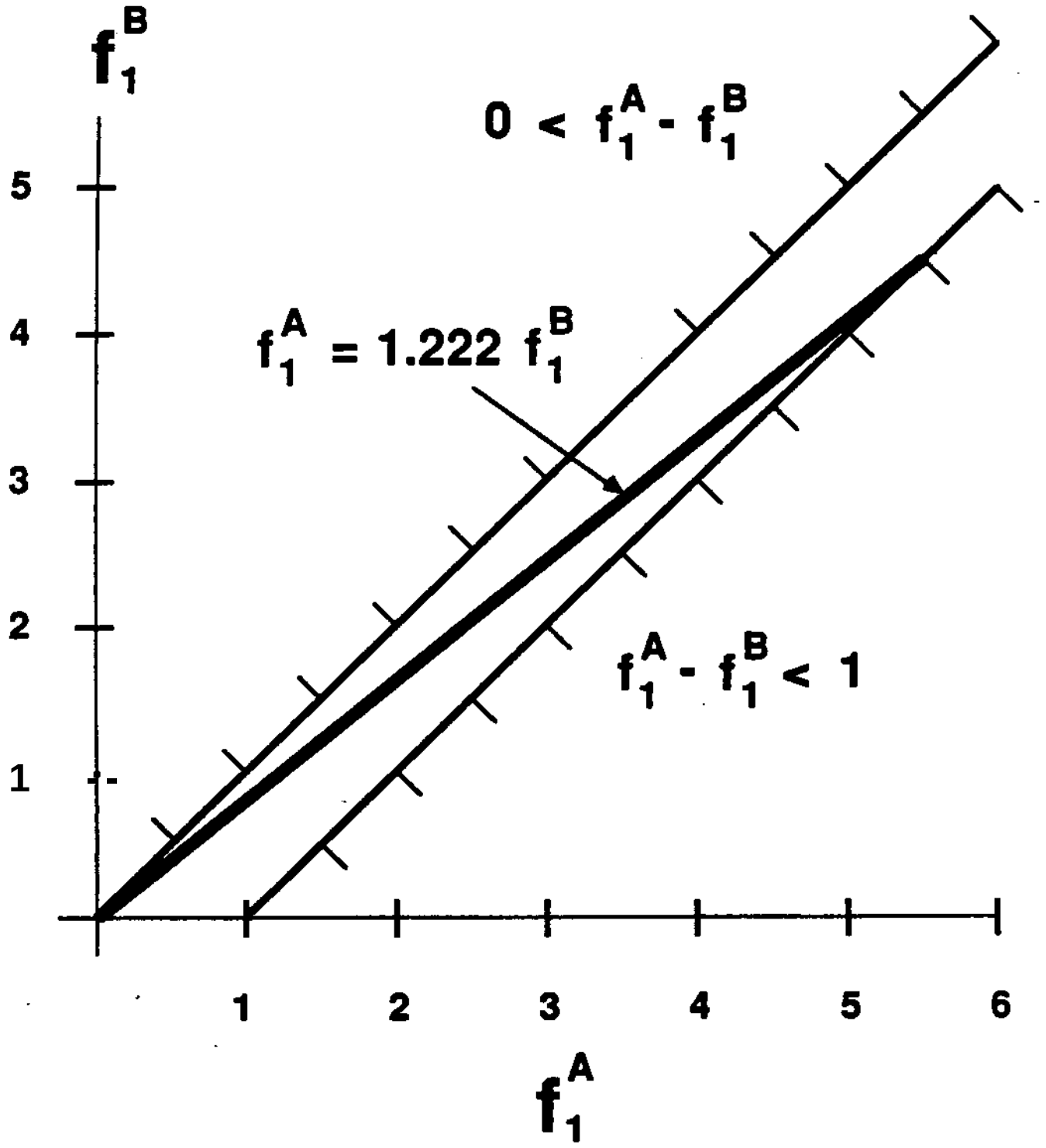
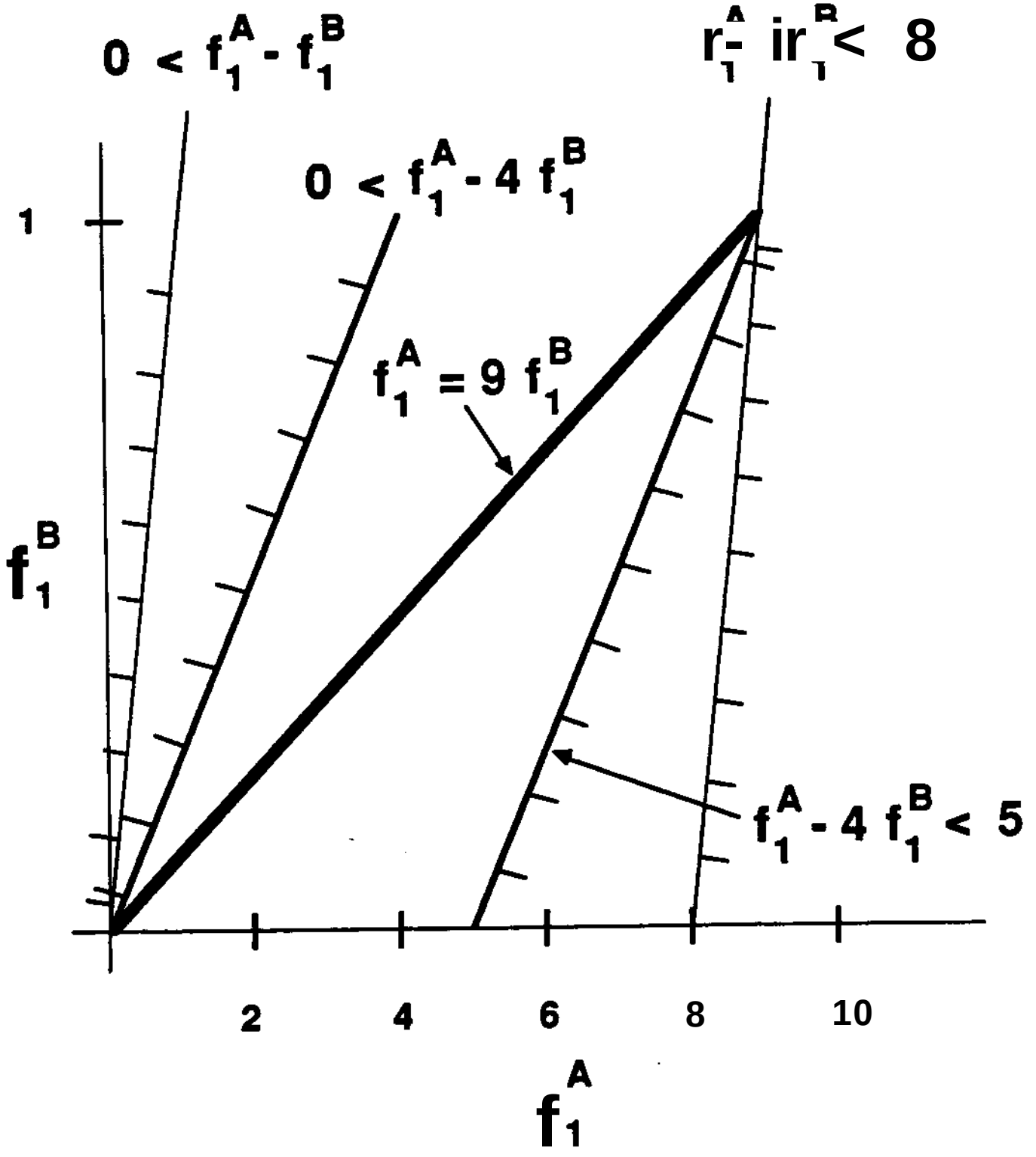
Figure C-2. Unsealed Versus Scaled Difference Relation (9,1)