Carnegie Mellon University
Research Showcase @ CMU

Department of Chemical Engineering | Carnegie Institute of Technology

1988

Optimal retrofit design for improving process flexibility in nonlinear systems.

Efstratios N. Pistikopoulos
Carnegie Mellon University

Ignacio E. Grossmann

Carnegie Mellon University.Engineering Design Research Center.

Follow this and additional works at: http://repository.cmu.edu/cheme

Recommended Citation
Pistikopoulos, Efstratios N.; Grossmann, Ignacio E.; and Carnegie Mellon University.Engineering Design Research Center., "Optimal retrofit design for improving process flexibility in nonlinear systems." (1988). *Department of Chemical Engineering.* Paper 107.
http://repository.cmu.edu/cheme/107

This Technical Report is brought to you for free and open access by the Carnegie Institute of Technology at Research Showcase @ CMU. It has been accepted for inclusion in Department of Chemical Engineering by an authorized administrator of Research Showcase @ CMU. For more information, please contact research-showcase@andrew.cmu.edu.

NOTICE WARNING CONCERNING COPYRIGHT RESTRICTIONS:
The copyright law of the United States (title 17, U.S. Code) governs the making of photocopies or other reproductions of copyrighted material. Any copying of this document without permission of its author may be prohibited by law.

Optimal Retrofit Design for Improving Process Flexibility In Nonlinear Systems

Part I - Fixed Degree of Flexibility

by

Efstratios N. Pistikopoulos and Ignacio E. Grossmann

EDRC 06-49-89

OPTIMAL RETROFIT DESIGN FOR IMPROVING PROCESS FLEXIBILITY IN NONLINEAR SYSTEMS PART I - FIXED DEGREE OF FLEXIBILITY

Efstratios N. Pistikopoulos and Ignacio E. Grossmann*

Department of Chemical Engineering

Carnegie-Mellon University

Pittsburgh, PA. 15213

August 1988

* Author to whom correspondence should be addressed

University Libraries
Carnegie Mellon Universit/
Pittsburgh, Pennsylvania 152W

ABSTRACT

In this paper the problem of determining minimum cost modifications for redesigning existing process flowsheet systems so as to achieve a specified level of flexibility is addressed. A novel computational strategy for nonlinear models is proposed, which relies on the iterative solution of an optimal design formulation that features as constraints a relaxation of the feasibility function for the region of flexibility. Special structures of nonlinear models are exploited, in particular models that are bilinear in the uncertain parameters and control variables. Examples are presented to illustrate the proposed procedures.

INTRODUCTION

The problem of systematically incorporating flexibility in the synthesis and design of chemical processes has received increasing attention in the literature (e.g. Douglas, 1982, Grossmann *et al,* 1983, Grossmann and Morari, 1984, Pai and Hughes, 1987, Reinhart and Rippin, 1987). Also, due to large reductions in grassroots designs, greater attention has been placed lately in the development of systematic methods for retrofit designs (Grossmann, Westerberg and Biegler, 1987). As noted by Cabano (1986) retrofit projects "constitute the ultimate management challenge", due to the variety of considerations that must be accounted for; e.g. limitations of energy resources, economic restrictions and market and processing uncertainties. To tackle retrofit projects, it is clear that one of the problems that is of great importance is the improvement and optimization of the flexibility of existing processes. However, this problem has only recently started to receive limited attention in the literature.

Most of the attention for improving flexibility in retrofit design has been focused on heat exchanger networks. Kotjabasakis and Linnhoff (1986) have developed procedures that are based on extensive sensitivity tables to incorporate flexibility in the retrofit design of heat exchanger networks. Although some valuable insight and interesting case studies results have been reported, their approach cannot be readily extended to other chemical processes. Calandranis and Stephanopoulos (1986) have also proposed evolutionary techniques for improving the operability of heat exchanger networks. These have been implemented in AI computer software that is supported by graphics.

Pistikopoulos and Grossmann (1988a) have recently developed systematic procedures to improve the flexibility of existing chemical plants that are represented by linear models. With their procedures minimum investment cost modifications for the retrofit can be determined for a specified level of flexibility. Furthermore, the optimal trade-off between retrofit cost and expected revenue can be established, yielding an optimal redesign with a level of flexibility that maximizes the total profit

of the process (Pistikopoulos and Grossmann, 1988b). However, the main limitation of their approach is the assumption that the process model is linear. Since chemical plants typically exhibit nonlinearities, it is clearly desirable to develop methods that can treat these explicitly rather than having to rely on linear approximations.

It is the purpose of this two part paper to extend the approaches to retrofit design by Pistikopoulos and Grossmann to the case of nonlinear models. In Part I a novel computational strategy is proposed for determining minimum cost modifications in order to redesign a process at a desired level of flexibility. This strategy relies on the iterative solution of an optimal design formulation that features explicit constraints for flexibility. It is shown that the computation in this strategy can be greatly simplified for the case of models that are linear in the design variables and bilinear in the uncertain parameters and control variables. Finally, the cases when no control variables are present, and when the state variables are not eliminated from the formulations are also discussed. The second part of this series is focused on establishing the optimal trade-off between investment cost for the retrofit and expected revenue that result from increasing flexibility.

PROBLEM STATEMENT

The specific problem which is to be addressed in the first part can be stated as follows.

The nonlinear model of an existing flowsheet with fixed equipment sizes and fixed structure is given. Nominal values together with positive and negative expected deviations are also provided for a set of uncertain parameters. The problem is then to determine minimum cost modifications for redesigning the flowsheet so as to achieve a specified level of flexibility as quantified by the index proposed by Swaney and Grossmann (1985).

The performance and specifications of the chemical process will be described by a nonlinear model, which typically represents the heat and mass balances, thermodynamic properties, design equations and design constraints. This model will in general consist of a set of equations and inequalities. For convenience in the presentation, however, it is assumed that the equations are eliminated so as to lead to a set of reduced nonlinear inequality constraints of the following form:

$$f_i(d,z,d) \leq 0, \qquad JGJ \tag{1}$$

The vector d of design variables defines the equipment sizes, the vector z of control variables stands for the degrees of freedom that are available during operation, and which can be adjusted for different realizations of the vector of uncertain parameters 0. Note that feasible operation of a design d at a given parameter value *6* requires the selection of the control z to satisfy the inequalities in (1).

For the investment cost for each of the design modifications, $Ad._i$, i=1,.,r, the following fixed charge cost model will be assumed:

$$C_i = a_i w_i + y^{\wedge} dAd._i) \tag{2}$$

where a_i, B_i, are cost coefficients, w_i is a 0-1 variable which is activated when

a design change Ad_i takes place and $c(Ad_i)$ is a linear or nonlinear cost function of this variable. Also, $d_i = d_i^E + Ad_i$, where d_i^* is the value of the design variable for the existing process.

As for the flexibility analysis of the process, the feasibility test proposed by Halemane and Grossmann (1983) will be used as a basis for the formulations. This test examines whether a given design is feasible to operate over a range of the uncertain parameters that corresponds to a specified flexibility index value F. The range is given by $T[F)=\{d \mid d''-FA0' \pounds 6 \leq d^N+FAd^*\}$ where 6 is the vector of the uncertain parameters, 0^N is the feasible nominal parameter point, A0", A0* are fixed negative and positive expected deviations and F is the flexibility index.

The following section will present the mathematical formulation for the retrofit design problem described above.

PROBLEM FORMULATION

The problem of determining minimum investment cost modifications of an existing design to ensure feasible operation over a parameter range $T\{F)=\{810^N-fA0^* < 8 < 8^N+FAd^*)$ with fixed flexibility F, can be represented conceptually as:

$$\min_{Ad} \left[\text{Investment cost for changes} \right] \tag{P1}$$

$$\text{s.t. Redesign is feasible } \bar{V}\ 0 \in T(F)$$

In order to model the constraint in (P1), Halemane and Grossmann (1983) introduced the feasibility test, which involves the following max-min-max problem:

$$*(d,F) = \max_{0 \in T(F)} \min_{z} \max_{j \in J} f(d,z,0) \leq 0 \tag{3}$$

where A(d,F) can be regarded as a feasibility measure for a given design d. This feasibility test determines whether for each realization *d* of the uncertain parameters,

9£T{F), there exists a control variable z that can be selected during plant operation to satisfy each one of the constraint functions f_j, *j€J.* The solution of this test defines a critical point *ff*^{c} for feasible operation; it is the one where the feasible region is the smallest if *(d,F) ^ 0, or it is the one where maximum constraint violation occurs if A(d,F)>0.

In order to solve the max-min-max problem in (3), which in general gives rise to a nondifferentiable global optimization problem, Grossmann and Floudas (1987) proposed the following mixed-integer formulation for this problem:

$$
\begin{aligned}
&/X(d,F) = \max_{0,z,u,s_j,X_j,y_j} u \\
&\text{s.t.} \quad s_j \cdot f_i(d,z,0) - u = 0 \qquad i_J \in J \\
&\mathbf{I} \quad \lambda_j = 1 \\
&\mathbf{Z}_{j\in J} \quad 3 \; f. \; , \; d \; z \\
&\left.\begin{aligned} &X_i - y_j \; 5 \; 0 \\ &s_j - U(1 - y_j) * 0 \end{aligned}\right\} j \in J \\
&\sum y = n + 1 \\
&f \cdot F \; \Delta\theta^- \leq \theta \leq f \cdot F \; A9* \\
&y_j = 0,1 \; ; \quad X_j \, , \, s_j \; £ \; 0 \qquad j \; 6 \; J
\end{aligned}
\tag{4}
$$

This formulation is obtained by applying the Kuhn-Tucker conditions to the inner min-max problem in (3), and where the complementarity conditions are represented through the use of binary variables y_j that are equal to one if the constraint f_j is

active in limiting the flexibility (i.e. f_j=u). The non-negative variables s_j, A_j, represent the slacks and Lagrange multipliers, respectively, for the inner min-max problem. Also, assuming that Haar's condition holds (Madsen and Schjaer-Jacobsen, 1978) there are n+1 active constraints that limit flexibility, where n is the number of control variables z.

As noted by Grossmann and Floudas, problem (4) can be decomposed in terms of candidate sets of active constraints. Each candidate active set k, k=1,.,n_{AS}, corresponds to a particular choice of n+1 active constraints f^j that satisfy, for non-negative multipliers X^{jk}, the following stationary conditions:

$$\sum_{j \in J_A^k} X^k = 1, \qquad T_j^{2-} \quad x^k \; 8 \; f_{-s-1-} \; " \; \circ \qquad k\text{-}1\text{-}n_{AS} \tag{5}$$

where $I_A = \{I \mid f\text{-}u_j\}$. $X^k_j > 0$ for $I \in I_A$, $X^k_J = 0$ for $\backslash f_j^k$. and $U^k I_A = n+1$, k«1..,n_{AS}. Appendix I presents a systematic procedure for identifying the candidate sets of active constraints assuming the gradients df_j/dz are one-signed.

Since the choice of a candidate active set k fixes n+1 values of the 0-1 variables y_j and sets their slacks s_j to zero, problem (4) can be reduced to the nonlinear programming problem:

$$X^k(d,F) = \max_{0^k,?,u} u$$

$$\text{s.t.} \quad f.(d,z\backslash 0^k) = u \qquad j \in J_A^k \tag{6}$$

where 0^k, z^k are the uncertain parameters and the control variables associated with active set k. Finally, $X\{d,F) = max\{X^k\{d,F)=u^k \backslash Ar=1,.,/7_{AS}\}$, since the active set

with the largest value of u^k corresponds to the solution of problem (4). Hence, the condition of feasible operation for all 0€T(F) represented by X(d,F) £ 0, also implies $X^k(d,F)£0$, $k^s1,.,n_{AS}$, or alternatively u^k £ 0, $k=1,.,n_{Ag}$.

In the next section it will be shown that incorporation of the feasibility constraint (3) in (P1) can be accomplished through a relaxation that is based on the solution of the subproblems in (6) for each candidate active set k.

RELAXATION OF FEASIBILITY TEST

As was shown in the previous section, the constraint for ensuring feasibility in the range T(F), $X(6,F)\leq 0$, can be expressed as a set of inequalities:

$$*^k(d,F) \leq 0 \qquad k=1,.,n_{AS} \tag{7}$$

where $*^k(d,F)$ is given by the solution of the NLP in problem (6) for active set k. In this section it will be shown that (7) can be expressed explicitly in terms of the inequalities f_i jGJ, and that it can be incorporated within an iterative solution of the optimal design problem.

Firstly, from (6), let $*^k(d,F) = \max_{8^k} u^k(d,F)$, where

$$u^k(d_f 9^k) = \max_{u,z^k} u$$

$$s.t. \quad f_i(d,z^k,d^k) = u \qquad jeJ_A{}^k \tag{7a}$$

Then from the Lagrangian at the optimal solution (see Appendix II), the feasibility function u^k that is associated with the k'th active set of a design d can be expressed for a fixed value 8^k of the uncertain parameters in the following way[1]:

[1] Note, that this expression is an extension for nonlinear models of the result obtained by Pistikopoulos and Grossmann (1988a) for linear models

$$u^k(d,\theta^k) = \sum_{j \in J_A^k} \lambda^k_j \, f(d,z \backslash d^k) \tag{8}$$

where X_j^k are multipliers satisfying equation (5). Thus, the Feasibility Test problem for each active set k can be expressed as:

$$*^k(d,F) = \max_{\theta^k \in T(F)} u^k(d,0^k) \tag{9}$$

$$= \max_{0^k \in T(F)} \overline{X}_{J \wedge \bar{J}_A - K} \; A." \; f_{\prime}(d,z \backslash 0^k) \qquad k=1,.,n_{AS}^{e}$$

The main advantage of the expression in (9) is that it provides an explicit equation for the feasibility of an active set k. The difficulties, however, are that it involves a maximization problem as well as the evaluation of the Lagrange multipliers X_j^k, which in general are a function of the design variables d and the uncertain parameters *9.* To circumvent these difficulties it is convenient to first consider the expression in (9) for a fixed set of parameter point<s) $9^{k,\sim}$, -£=1,..,L, which then yields:

$$X^k\{d.F) \quad Z \quad \underline{y^*}_{j \in J_A^k} \quad X^k_{\cdot} \; f_j(d,z \backslash 9^{ki}) \qquad 1\text{-}1...L \tag{10}$$

Note that the above inequalities represent a relaxation to the maximization of problem (9) since they involve only a finite number of parameter values. Hence, these inequalities will in general overestimate the region for feasible operation. Furthermore, assume that Lagrange multipliers $X_j^{k,p}$ are evaluated from (5) at each potential critical parameter value $9^{K\ell}$. Then, by applying the Saddle Point Theorem (Bazaraa and Shetty, 1979), this leads to the following inequalities from (10):

$$X^k(d,F) \geq \sum_{j \in J_A} X^k \; f\{d,z \backslash \theta^{k,U}) \geq \sum_{i \in J_A} \lambda^{k,l}_{**} f(d,z \backslash d^{k,U}) \qquad 1\text{-}1..L \tag{11}$$

Given L parameter points $d^{k\ell}$ with associated multipliers $X^{k\ell}$, £=1,.,L, it is then possible to incorporate the inequalities for $*^k(d,F)£0$ in (11) within the mathematical formulation (PI) as follows:

$$\min_{w.Ad,z^k} \sum_{\wedge}^{r} y \quad [a w + B.ci\&d)]$$

$$\bullet\bullet t- \sum_{jej\ A^k} Z - k \quad *r \quad fW.z\backslash*"-> \quad * \quad 0 \qquad J-1...L. \quad k-1...n_{AI} \qquad \text{(P4}$$

$$d = d^E \bullet Ad$$

$$-Uw_i \leq Ad_i \leq Uw_i, \quad w_i=0,1, \quad i=1,.,r$$

where U is an upper bound for the design changes. Note that in this way problem (P^L), which involves the solution of a mixed-integer nonlinear programming problem (MINLP), corresponds to a relaxation of problem (P1). It also has the unique feature of involving explicit constraints for flexibility. As shown in the next section, problem (P^L) can be incorporated within an algorithmic procedure where the parameter points $Q^{K\ell}$ and the multipliers $A_j^{k\ell}$ are generated successively at each iteration *l*, ℓ=1,.,L.

ALGORITHMIC PROCEDURE

Based on the analysis and the formulation (P^L) presented in the previous section, an algorithm can be developed to find the optimal parametric design changes Ad for a specified degree of flexibility. The steps in this algorithm are as follows:

STEP 0 : Specify the flexibility index F and set $d=d^E$, L=1.

STEP 1 : At the value d of the design variables:

- (a) Identify the n_{AS} candidate sets of active constraints as shown in

Appendix I.

- (b) For every active set k, $k=1,.,n_{Ae}$ solve the feasibility test problem in (6):

$$X^k(d,F) = \max_{0^k,z\backslash u} u$$

$$\text{s.t.} \quad f_j(d,z\backslash 0^k) \ll u \qquad j \ 6 \ J/ \tag{6}$$

$$d'' - F \ AS' \ £ \ 8^k \ £ \ d^N + F \ A(T$$

which will yield the parameter point d^{kX} and the nonnegative multipliers X_j^{kL} of the active constraints ($f_j = u$, $j€J_A^k$).

- (c) If $A^k(d,F)£0$ for $k=1,.,n_{A_S}$ STOP. The design is feasible. Otherwise, go to step 2.

STEP 2 : Solve the MINLP problem:

$$\min_{w,Ad,z^k} \frac{\overline{\ \ }^{r}}{\underline{\ \ }} \ [\ll w_i + y_i?c<Ad_i)]$$

$$\text{s.t.} \quad X_j^k \ \wedge \ U4_t z^k, d^{ki}) < 0 \qquad £\ll 1,..L, \quad k*1_{f.f} n_{Ae} \tag{P^L}$$

$$d = d^6 + Ad$$

$$-Uw_i \ 5 \ Ad_i \ S \ Uw_i, \quad w_i = 0,1, \quad i\gg 1,.,r$$

to obtain the vector Ad of the design changes; set $d=d^E+Ad$, $L=l+1$, and go back to step Kb).

It should be noted that this algorithmic procedure involves an iterative scheme between two basic problems: an NLP feasibility test problem in step 1, and an MINLP redesign problem in step 2. In the feasibility test problem potential critical parameter values of the uncertain parameters are determined for each candidate

active set, as well as the values of the Lagrange multipliers corresponding to the active constraints of each set. A relaxed form of the feasibility function $*^k(d,F)$ is then generated for each set of active constraints, and these in turn are included in the redesign problem. The solution of the redesign problem corresponds to a minimum investment cost retrofit where relaxed feasibility constraints are involved for the specified flexibility index F. Note that as iterations proceed, the redesign problem accumulates all the approximations generated for the feasibility test. Also note that step 1(a) involves the analytical identification of the n_{AS} active sets. This requires the inequality constraints in (1) to be monotonic functions of the control variables z.

It is interesting to note that for the case that a linear model is involved for the description of the chemical process, the above algorithmic procedure becomes equivalent to the one suggested by Pistikopoulos and Grossmann (1988a). Instead of actually solving step 1(b), one can determine the Lagrange multipliers from equation (5), which are invariant to the design changes and uncertain parameters. The critical parameters can then be determined by analyzing the sign of the gradients of the equation in (8). With this, step 3 becomes a mixed-integer linear programming problem (MILP), whose solution will provide the optimal parametric changes for the specified flexibility index F. Hence, in the linear case the algorithm only requires one major iteration.

EXAMPLE 1

This section illustrates through a small analytical example the algorithm suggested in the previous section.

Consider that the specifications of a design are represented by the following inequalities:

$$f_1 = z^2/3 - (d_r d_2)^\wedge + d_1 - 2d_2 \text{ £ } 0 \quad '$$

$$f_2 = -0.25(1^\wedge - 3(9/8 + d_2 \leq 0 \qquad (12)$$

$f_3 \bullet z + 0^2/5 - 2d_1 - 2$ £ 0

These inequalities involve a single control variable z, two design variables d^ d_2 and a single uncertain parameter *6* with nominal value 0^N=4, and expected deviations A0*=5, A0*=4. For flexibility index F=1 the range of the parameter is then O£0£9. The values of the existing design variables are *q**4,* d_2^E=3.

By examining the plot of the feasible region for the existing design in Fig. 1, it is clear that for O£0£O.58 and 6.927≤0£9.O there is infeasible operation, whereas for 0.58^0^6.927 there is feasible operation. Then the question to be answered is what are the appropriate changes of the design variables d_l and d_2 in order that the new design be feasible for the operating range of the uncertain parameter *d* with flexibility index F=1 (i.e. O≤0≤9).

Applying the algorithmic procedure, the following results are obtained:

STEP 0 : Set F»1. d^=4, d_2^E=3, L=1.

STEP 1 : (a) Two active sets can be identified from the following two equations in (5), (i) *,+*$_2$$^+$*$_3$^{s}1 and (ii) O.eSzX^O^Bd^X^X^O. Since z£0, d_i^E=4, the first active set J_A^1 involves f_1 and f_2, and the second one, J_A^2, involves f_2 and f_3.

(b) For active set J_AMi,2} the solution of the feasibility test in (6) yields: $A^1(d^E,F)$=0.35 ≥0, with 0^U=O.O and X^'^0.36, X_2^u=0.64. For active set J_A^2={2,3} $A^2(d^E,F)$=2.912 ≥0 with fl^{2,1}*^ and $X_2^{2/l}$=X_3^{2J}=0.5. Then from (11):

X W) ≥ 0.36 f^cU^1,*^{1}-^{1}) *0.64 f^z^1^^{1,1}) (13)

X^2(6f) ≥ 0.5 f_2(d,z^2,^^{21}) ^0.5 f_3(d,z^2,0^{2J})

where z^1 and z^2 correspond to choices of the control variables for active sets 1 and 2 respectively.

STEP 2 : Assuming cost coefficients tf^a^SO, *fi,^{s}/3$_2$^{s}5.* problem (P) can be

formulated as the following MINLP :

$$\min_{w_1,w_2,z^1,z^2,\Delta d_1,\Delta d_2} \quad 50w_1 + 5\Delta d_1 + 50w_2 + 5\Delta d_2$$

$$\begin{aligned} \text{s.t.} \quad & O.^{\wedge}z^1)^2 - 0.16<z')d_l + O^{\wedge}d, - 0.08d_2 \pounds 0 \\ & 0.5(z^2) - O.i25(z^a)d_1 - d, + O.5d_2 + 5.4125 <5\ 0 \\ & d, \bullet 4 + Ad, \\ & d_2 = 3 + Ad_2 \\ & -1Ow_i \pounds Ad_i \pounds 1Ow_i, \quad w_i=O,1, \quad i=1,2 \end{aligned} \tag{14}$$

The optimal solution of the above MINLP is $w_1^{\wedge}w_2=1$, $Ad_1=3.5$, $Ad_2=1.88$ at a cost of 127.0 units. Then the new design is $d_l=7.5$, $d_2=4.88$ and we return to step Kb).

STEP Kb) : For both active sets $J_A^1=\{1,2\}$ and $J_A^2=\{2,3\}$ the feasibility test yields $A^1(d,F)=A^2(d,F)=0$. Therefore, according to step Kc) convergence has been achieved in one iteration. The results then indicate that in order to obtain a flexibility index equal to one (i.e. feasible operation for the whole range $O\leq 0\leq 9$) at minimum investment cost, both design variables should be increased by 3.5 and 1.88 respectively taking the values:

$$[\ d^{\wedge} = 7.5,\ d_2^{NEW} = 4.88\ ]$$

The effect of the redesign over the existing system can be seen in Fig. 2, which shows the feasible region of the redesigned model.

SPECIAL STRUCTURES OF NONLINEAR PROBLEMS

In this section, it Will be shown that by taking advantage of special structures of nonlinear process models, the algorithmic procedure that was presented in the previous section can be further improved in terms of its computational efficiency. Specifically, two nonlinear models will be considered. First, the case when the model is bilinear in the uncertain parameters and the control variables, and linear in the design variables. Second, the case when no control variables are present.

BILINEAR MODELS

In this **case,** the process model is assumed to be described with the following set of equality and inequality constraints:

$$\begin{aligned} &\textbf{(a)}\ A(8)x * B(d)z * C(d) = b \\ &\text{(b)}\ D(0)x * E(0)z \bullet F(0) + Gd \pounds 0 \end{aligned} \qquad (15)$$

where x is the vector of the state variables, A, B, C, D, E, F are matrices whose elements are functions only of the uncertain parameters *6,* G is a constant matrix and b is a constant vector. Then, from (15a) the set of state variables can be expressed analytically in terms of the control variables and the uncertain parameters as follows:

$$x = K\backslash B)\ [b - \mathbf{B(0)z} - C(0)] \qquad (16)$$

By substituting (16) in (15b) this results in the following set of inequality constraints:

$$f(d,z,0) = M(0)z \bullet N(0) + Kd \pounds 0 \qquad (17)$$

where *M(d), N(0)* and K are matrices that can be computed analytically from (16)(e.g. through MACSYMA). The inequalities in (17) are bilinear in terms of the control variables z and the uncertain parameters *6* and linear in terms of the design variables d. Typically, this is a model describing a number of chemical processes, such as utility systems with uncertain turbine efficiencies, linear chemical complexes with uncertainties in the* process conversions and some structures of heat exchanger networks with uncertain flowrates. It will be shown that for such bilinear models a number of important analytical properties can be obtained, with which their solution procedure can be greatly simplified.

PROPERTIES OF BILINEAR MODELS

Given **the** bilinear model in (17), two important properties can be shown to hold to simplify **the** algorithmic procedure for retrofit design:

PROPERTY 1 : *The Lagrange multipliers* X_j^k *for each active set k are only functions of the uncertain parameters 6 and can be computed analytically from the system of equations in (5).*

From (17) $df_j/dz^s M_j(0)$. Then X_j^k can be solved analytically (e.g. through MACSYMA) from the following system of equations:

$$\sum_{j \in J_A^k} V \bullet ' \tag{18}$$

$$\sum_{j \in J_A^k} X_j^k \, M_i(0) = 0$$

where clearly X_j^k are only functions of the uncertain parameters, i.e. $X_j^k * X_j^k(0)$.

PROPERTY 2 : *The feasibility function* $u^k(d,0^k)$ *in (8) for each active set k can be expressed analytically in terms of the design variables d and the uncertain parameters 8, and is independent of the control variables z.*

Substituting the inequalities in (17) in the expression for function $u^k(d,0)$ as given in (8), and applying equation (18) yields,

$$u^k(d,0) = \sum_{j \in J_A^k} 2^* \; X_i^k \; V^{d,z} - \Lambda) = \sum_{j \in J_A^k} 2^{\sim} \; \backslash^k \; i \; M \wedge > z \; * \; N_{>}(6) + K_j^d \;]$$

$$\text{»} \; \wedge_A \; X^k \; [\; N(0) \bullet K_j d \;] \tag{19}$$

The importance of these two properties for bilinear models is that the

computational effort for the feasibility test in (6) and the redesign problem (P^L) can be reduced significantly as shown in the algorithm of next section.

ALGORITHM FOR BILINEAR MODELS

STEP 0 : Specify the flexibility index F and set $d=d^E$, L=1.

STEP 1 : (a) Identify the n_{AS} active sets as shown in Appendix I, and determine the Lagrange multipliers $X_j^k(0)$ analytically from the system of equations in (18).

(b) Obtain the feasibility function $u^k(d,\#)$ analytically from the expression in (19).

STEP 2 : For each active set k, k*1,., n_{AS} at the value d of the design variables:

- (a) Obtain the potential critical parameter point 8^{kX} by solving the following nonlinear optimization problem:

$$\max_{6^k} \quad u^k(d,0) = \sum_{j \in T_A^k} X_j^k(0) \; [\; N_j(0) + K_j d \;] \tag{20}$$

$$\text{s.t.} \quad 0^N - FA0'' \le 0 \le 8^H + FA0^*$$

- (b) If $u^k(d,\#^{k,L}) \le 0$ for $k=1,.,n_{AS}$, STOP. The design is feasible. Otherwise, go to step 3.

STEP 3 : Replacing the constraints in (P1) by (19), the following mixed-integer optimization problem is solved

$$\min_{w,Ad} \; \sum_{\wedge T}^{r} \; [<z_i w_i \cdot \beta_i c(\Delta d)]$$

$$\text{s.t.} \quad X_k \quad V^k(0^k \wedge) \; C \; N_j(dkl) + K d_j] \wedge 0 \qquad £=1,.,L, \; k=1,.,n_{AS} \qquad (P^L_B)$$

$$j \in J_A^k$$

$$d = d^6 \cdot Ad$$

$$-Uw_i \wedge Ad_i \wedge Uw_i, \quad w_i=0,1, \quad i=1,.,r$$

to obtain the vector Ad of the design changes; set $d=d^E+Ad$, L=L+1 and go back to step 2.

It should be noted that in this algorithm problem (20) in step 2 is a significantly simpler NLP problem than (6) in the previous algorithm since (20) only involve a nonlinear objective function with simple lower and upper bounds. Also, for the case when the cost term c(Ad.) is linear, problem (P^) corresponds to a mixed-integer *linear* optimization problem (MILP), since for the potential critical parameter points $0^{k\prime\wedge}$ obtained in step 2(a) the constraints in (P^) become linear. If the cost function c(Ad.) is nonlinear, problem (P^) corresponds to a MINLP problem involving only linear constraints. Note also that in this problem no control variables z\ k=1,.,n_{AS} are required as opposed to the general nonlinear problem (P^L).

It is also interesting to note that the above algorithmic procedure converges in one single major iteration (i.e. L=1), if the first critical parameter point 0^M obtained from the solution of problem (20) remains the same for different values of the design variables d. A proof is given in Appendix C.

The following section illustrates the above algorithm with a small example problem.

EXAMPLE 2

Consider that the specifications of a design are represented by the following inequalities :

$$
\begin{aligned}
f_l &= -250 \bullet z(1-0/2) \bullet 2d_1 - 2d_2 \leq 0 \\
f_2 &= -1900 + z + d_1 \text{ £ } 0 \\
f_3 &= 2600 - z - 240 - 2d_1 \text{ £ } 0
\end{aligned}
\tag{21}
$$

These inequalities involve one control variable z, two design variables d^ d_2 and a single uncertain parameter 0, with nominal value of 0^N=1.O and expected deviations A0*=1.O, A0*=O.5 (i.e. range O.5£0≤2.O for F=1). The values of the existing design variables are d_1^E=10, d_2^E=5. Note also that the above inequalities are bilinear

in terms of the control variable z and the uncertain parameter 0,and linear in terms of the design variables d_1, d_2. Therefore the algorithmic procedure suitable for bilinear structures will be applied here.

The feasible region for the existing design is shown in Fig. 3. It can be clearly seen that there is an intermediate region for 1.13£0€1.62 of infeasible operation, whereas for O.5£0£1.13 and 1.62:£0<2.O the existing design is feasible. A redesign is then required to ensure feasible operation over the expected parameter range $0.5 \leq \theta \leq 2.0$; i.e. a retrofit with flexibility index of 1.0.

Applying the steps of the algorithmic procedure the following results are obtained :

STEP 0 : Set F=1, d^iO, d_2^E=5, L=1.

STEP 1 : From the system of equations :

$$x_1 \cdot x_2 * x_3 = 1.0$$
$$\lambda_1(1-\theta/2) + \lambda_2 - \lambda_3 = 0 \qquad (22)$$

two active sets can be identified for the existing design d^e; namely, $J_A^{1=}(f_2, f_3h$

STEP 2 : For active set $J_A Mf_2$, f_3K the computed values of the Lagrange multipliers are $X_2^1 = X_3^1$=0.5. Then,

$$u\ W) = V V *_3{}^1 f_3 = 350\text{-}12O+O.5d_1d_2 \qquad (23>$$

By plotting the right hand side of $u^1(d^E,0)$ as a function of *8* (see Fig. 4(a», it can clearly be seen that it is negative for O.5£0£2.O with critical parameter value at $0^{1/1}$=2.O. For active set J_A^{2s}^f^ f_3K the Lagrange multipliers are given by X^= 1/(2-0.50), A_3^2=(1-O.50)/(2-O.50). Then,

$$u^2(d,0) = X_i^2 f_i + X_3^2 f_3 = [350\text{-}13O0^2\text{-}24O^2 d_1 + ((9\text{-}4)d_2]/(2\text{-}O.50) \qquad (24a)$$

For the values of the existing design this results in the following expression,

$$u^2(d^E,0) \geq (3605 - 13O0^2 - 240) / (2-0.55) \tag{24b}$$

By plotting the right hand side of $u^2(d^E,0)$ as a function of *8* in Fig. 4(b), it can clearly be seen that it is positive for 1.13£0£1.62, with the maximum violation at 0^{2}-^{1}* 1.398.

For the critical parameters points the functions u\ k=1,2, yield:

$$\begin{aligned} u^1(d,0°) &= 0.5d_l - d_2 - 50 \\ u^2(d,0^{c,2}) &= 1.537d_i - 2d_2 * 1.7044 \end{aligned} \tag{25}$$

STEP 3 : Assuming cost coefficients « $_1$»« $_2$«50, *fl^/lf^O.* problem (P_B*) can be formulated as the following MILP :

$$\min_{w_1, w_2, \Delta d_1, \Delta d_2} \quad 50w_1 + 50w_o + 10\Delta d_1 + 10\Delta d_2$$

$$\begin{aligned} \text{s.t.} \quad & 0.5d_1 - d_2 - 50 \leq 0 \\ & 1.537d_i - 2d_2 \bullet 1.7044 <> 0 \\ & d_i = 10 + \Delta d_i \\ & d_2 = 5 \bullet \Delta d_2 \\ & -10w_i \leq \Delta d_l \leq 10w_i \\ & -10w_2 \wedge \Delta d_2 \wedge 10w_2 \\ & \Delta d_1, \Delta d_2 \geq 0, \quad w_1, w_2 = 0,1 \end{aligned} \tag{26}$$

The solution of the above MILP yields w^O, Ad^O, w_2=1, Ad_2=3.5386 with a minimum cost of 85.368 units. The feasibility test of step 1(b) for d^iO, d_2=8.5386 yields u^d^^O, u^2(d,0)£O for both active sets. Therefore, an optimal redesign has been achieved with values for the redesign [d^^iO, d_2^{NEW}=8.5386]. Fig. 5 shows the feasible region for the redesign, whereas in Fig. 6 the functions $u^k(d^{NEW},0)$, k=1,2, are shown.

MODELS WITH NO CONTROL VARIABLES

For the particular case when there are no control variables (n=0), or alternatively when these are assumed to remain constant during operation, only one constraint is allowed to be active (see equation (4)). The feasibility test in (4) can then be decomposed in the following two steps (see Grossmann and Floudas, 1987) :

$$u^j = \max_{\theta^j \in T(F)} f_j(d) \qquad j \in J \tag{27}$$

with which $$A(d,F) = \max_{j \in J} u^j \tag{28}$$

The idea is then to incorporate the above expressions in an algorithmic procedure that is similar in nature to the previous algorithms. The steps of this procedure are as follows :

STEP 0 : Specify the flexibility index F and set $d=d^E$, L=1.

STEP 1 : At the value d of the design variables:

- (a) Solve the feasibility test problem as in (27) for each one of the individual constraints j€J to obtain its potential critical parameter point *d*>\
- (b) If A(d,F)≤0, as given by (28), STOP, the design is feasible. Otherwise, go to step 2.

STEP 2 : Solve the following MINLP problem

$$\min_{w,A_d \in T} \sum_{i=1}^{L} [\langle w_i \cdot \rangle_i \cdot c(A_d)]$$

$$\text{s.t.} \quad f_j(d,\theta^{j*}) \leq 0 \qquad L^*\ldots L \quad j \in J$$

(P_2^L)

$$d = d^E + Ad$$

$$-Uw_i \leq Ad_i \leq Uw_i, \quad w_i=0,1, \quad i=1,..,r$$

to obtain the vector Ad of the design changes; set $d=d^E+Ad$, L=L+1 and go back to step 1(a).

It should be noted that all constraints f_j, $j \in J$, are included in problem (P_z), since each one of them is a potential active set. The number of variables, however, is small, since only the design changes Ad_i are free variables for the optimization problem.

PROCESS EXAMPLES

Three example problems will be considered to illustrate the application of the proposed procedures. The first one will correspond to the nonlinear model of a reactor-recycle compressor process system. The second example will correspond to a bilinear model of a utility system, where the capability of the proposed methodology to include options for structural modifications will be also pointed out. The last problem will correspond to the nonlinear model of a heat exchanger network where no control variables are present and the algorithmic procedure for such a case will be applied in the presence of explicit equality constraints.

EXAMPLE 3

The flowsheet of a reactor-recycle compressor process system, considered in Swaney and Grossmann (1985), is shown in Fig. 7. The reactor section is treated simply as a pressure drop, but due to variations in byproduct formation (catalyst aging) significant variations in the recycle gas molecular weight M_R are introduced. The existing design has a compressor driver power limit W^D of 15400 KW, a compressor head $H^\#$ of 192.8 KJ/Kg and a throughtput $Q^\#$ of 4.432 m^3/s. Four uncertain

parameters are considered: the feed throughtput F_Q, the molecular weight of the feed M_o, the recycle gas molecular weight M_R and the pressure-drop resistance of the reactor section k_f. Nominal values and expected deviations are provided for the four parameters as shown in Table 1. Control of the recycle flow is provided by a throttling valve at the compressor discharge.

The specification constraints as well as data for the retrofit investment cost are presented in Table 2. The problem is then to determine minimum cost modifications to obtain a redesign with a flexibility index F of 1; i.e. feasible to operate over the whole parameter range.

The flexibility index of the existing design d^E was first computed yielding a value of F=0.1034 for the critical parameter $0^c=(F_o^u, M_Q^U, M_R^L, k_f^u)$ (see Swaney and Grossmann, 1985). Applying then the procedure in Appendix I, four active sets were identified, namely J^MI.4}, $J_A^2=\{1,3\}$, $J_A^3=\{3,5\}$, J/={4,5}. The feasibility test problem in (6) provided the following results : $\wedge^l(d^E,F)$«31.66 £0 with 0^u*$(F_o^u, M_Q^U, M_D^L, k,^u)$ and $X_{.}^u$=0.086, X/^0.914. $A^2(d^E,F)$=-1.63 ≤0 with $0^{2J}=(F^u, M_o^u, M_O^L, k,^u)$ and X_1^{21}=0.03, $X,_3^{21}$«0.97. *$^3(d^E,F)$=-2.15 £0 with $0^{3'}$=<F S_o M_o^L, M_O^L, $k,_f^L$) and X_3^{31}=0.959, X_5^{3J}=0.041. $X^4(d^E,F)$=-10.92 50 with $0^{4J}=(F_o^L, M_o^u, M_o^u_R, k^u_f)$ and X_4^{41}=0.50, X_5^{41}=0.50. Then, problem (P^L) was solved with the cost data of Table 2 and the result obtained was that the compressor head $H^\#$ should change from 192.8 KJ/Kg to 285.024 KJ/Kg with a cost for the modification of $9.274x10^4. The values of the two other design variables (W°, $Q^\#$) remained unchanged. The feasibility test for the new design variables verified indeed that a feasible redesign is obtained to operate over the whole parameter range. Therefore, with values for the design variables :

$$[\ W^D = 15400\ KW,\ H^* = 285.024\ KJ/Kg\ ,\ Q^* = 4.432\ m^3/s\ ]$$

an optimal redesign with flexibility index of 1.0 was achieved in one single iteration.

EXAMPLE 4

Figure 8 shows a slightly modified version of the steam and power system discussed in Edgar and Himmelblau (1988). To produce electric power, the existing system contains two turbines, whose characteristics are listed in Table 3. The first turbine has higher efficiency but cannot produce as much power as the second turbine. Data about the steam header, and the current production levels of electric power, MP steam and LP steam are shown in Table 4. Due to an ongoing expansion of the supporting plant there is a significant uncertainty on the actual demands on the system. Variations also exist on the actual values of the turbines efficiencies. Nominal values and expected deviations for these parameters are listed in Table 5.

The solution of the flexibility analysis problem for the existing system yields a flexibility index of 0.22, clearly suggesting that retrofit action should take place in order to ensure that the utility demands are met. Four structural modifications have been proposed to be included within a superstructure (see Fig. 8); namely, a new boiler may be installed if the production of HP steam is over 400,000 £b/hr, electric power (PP) may be purchased from a utility company, and two turbines (3 and 4) may be installed with similar characteristics as the existing ones (1 and 2, respectively). Cost data about the proposed modifications are given in Table 5.

The proposed superstructure, shown in Figure 9, can be modeled as a MINLP problem, which involves a fixed charge cost model representing the investment cost for the retrofit as an objective function. The model involves 8 linear equalities, 4 nonlinear equalities and 20 linear inequalities in 4 0-1 variables and 29 continuous variables: 12 state variables, 6 control variables, 7 uncertain parameters and 4 design variables. Logical linear constraints relating the 0-1 variables and the continuous variables are also included. Since the model is bilinear in terms of the uncertain parameters *6* and the control variables z, and linear in the design variables d, the algorithmic procedure for such cases has been applied. Note that the state variables have not been eliminated but handled explicitly. Note also that since the number of *potential* active sets is rather large in this case (over 200), only the five active sets with flexibility index less than one for the existing design have been included in the

redesign problem (P_B^L). It is interesting to note that the demand constraints are always active and have been included in all five sets.

The solution of the MILP problem in (P_B^L) indicates to install a new boiler of 150,000 *lblhr* and purchase one turbine (Turbine 4) similar to the second one at a minimum investment cost of $\$1.3x10^6$. The other two alternatives, addition of turbine 3 and purchase of electricity, were not chosen. The feasibility test for the redesign verifies that the new structure is now feasible to meet the demands within the desired range (i.e. flexibility index of one). Therefore, an optimal redesign has been obtained, which is shown in Figure 10.

EXAMPLE 5

The heat exchanger network of Fig. 11 (see Grossmann and Morari, 1983) is shown with given conditions for the heat capacity fiowrates and inlet temperatures. Inequality constraints are specified the outlet temperature T_{H_1} of the hot stream H_1 and the outlet temperature t_{c2} of the cold stream C_2, whereas the outlet temperature of cold stream C_1 has been specified at 500 K. The existing areas of the two heat exchangers have the values of 31.2 m^2 and 41.2 m^2, respectively. The values of the overall heat tranfer coefficients U^ U_2 of the heat exchangers are expected to vary between 0.64 and 0.96 kW/m^2K, whereas their nominal values are 0.8 kW/m^2K respectively. Then a redesign is required for the areas of the heat exchangers to ensure feasible operation over the expected range of the heat transfer coefficients.

The inequalities of the heat exchanger network are shown in Table 6, where cost data for the retrofit are also shown. Since 8 equations in 8 unknowns are involved for the nominal values of the two parameters, there are *no control variables* in this model. Thus, the algorithmic procedure suitable for such models will be employed here. The results of the feasibility test for the existing design are also shown in Table 6, where it can clearly be seen that constraints (e) and (f) are violated (i.e. u^5=0.676 and u^6=5.764) with critical parameter values (U^U^), (U^U^) respectively. Then, by including them in problem (P_2), the solution suggests that the

area of the first heat exchanger should be decreased by 18%, whereas the area of the second heat exchanger should be increased by 33% in order to obtain a feasible redesign at a minimum investment cost of $23,200. Therefore, with areas for the two exchangers of [A_1^{NEW}=25.77 m^2, A_2^{NEW}=54.4 m^2], an optimal redesign has been achieved which is feasible to operate over the whole parameter range 0.64£U_i£0.96 KW/m^2K, i*1,2.

DISCUSSION

As has been illustrated with the example problems, the proposed methodology for retrofit with fixed flexibility is general enough to handle nonlinear chemical models, and at the same time can be adapted to take advantage of special nonlinear structures. For the particular case of models with bilinear terms in the uncertain parameters *d* and the control variables z, analytical properties can be established which for the case of linear costs reduce the redesign problem to a mixed-integer linear programming problem. This greatly simplifies the solution procedure as was shown with examples 2 and 4.

It is also interesting to note that in all the example problems of this paper convergence was achieved in only one major iteration of the proposed algorithms. Theoretically there is of course no guarantee that this will always be the case. However, a possible explanation of this behavior lies on the following facts. First, the candidate limiting active sets that are identified "a priori" at $F=F^E$ (existing design) seem to remain always the same at $F=F^T$ (redesign), which makes the consideration of only these active sets sufficient. Moreover, it is also often the case that the "critical" parameter points evaluated for each limiting active set remain the same for different choices of the design variables. As shown in Appendix C, this implies that for the case of bilinear models convergence can be guaranteed for one single iteration.

Finally, although the design applications are different, it is interesting to note the differences and similarities between the basic algorithms of this work and the

one by Halemane and Grossmann (1983) who considered grassroots design problems. In their work, the mathematical formulation involved the original constraints for different values of the uncertain parameters, without including explicitly constraints to account for flexibility. In this paper, however, *explicit* flexibility constraints were introduced within the redesign formulation, which allows a more efficient and compact representation of the problem. In the work of Halemane and Grossmann, the redesign problem corresponds to a "multiperiod" formulation where constraints are evaluated at several parameter points. In addition, the selection of the initial set of parameter points is arbitrary, which may result to including points that will never become critical. In this work, however, the critical parameter points for each active set are generated a-priori and only relaxed feasibility constraints have to included for them. This clearly results in fewer number of constraints and in a fewer number of iterations required for the algorithmic procedure. For the limiting case of linear functions, the procedure proposed in this work is guaranteed to terminate in one step, whereas with the procedure by Halemane and Grossmann this can not be achieved unless all the vertex parameter points are to be included. Finally, the limitation in this work versus the one by Halemane and Grossmann is that no control variables have been assumed to be present in the objective function. This assumption, however, could be relaxed by explicitly considering in the formulation one or more parameter points for which control variables are to be selected for the optimization.

ACKNOWLEDGEMENT

The authors would like to acknowledge funding from the National Science Foundation under grant CPE-8351237.

APPENDIX A. FEASIBILITY FUNCTION

For a candidate active set k, k=1,.,n_{AS}, the feasibility function of a design d at the parameter value 8^k is given by:

$$u^k(d,0^k) = \max_k \; u$$

$$s.t. \quad fid,z\backslash 8^k) = u \qquad /ej^{\,k} \qquad \text{UD}$$

Provided that each nxn square submatrix of the partial derivatives of the constraints f_j, j€J_A^k with respect to the control z is of rank n (Haar condition), then the Kuhn-Tucker conditions of (A1) yield the square system of equations :

$$\sum_{j \in J_A^k} X_j^k \bullet 1 \qquad \text{(A2.a)}$$

$$\sum_{j \in J_A^k} \lambda_j^k \frac{\partial f_j}{\partial z} = 0 \qquad \text{(A2.b)}$$

Therefore, the Lagrange multipliers X_j^k are only functions of the design variables d and the uncertain parameters *d,* independent of the control variables z, i.e. $X_j^k = X_j^k(d,\wedge^k)$.

Furthermore, consider the Lagrangian of the function $u^k(d,0^k)$ in (A1):

$$\mathbf{L^k \; (u,z,X^k) = u^k * \sum_{j \in J_A^k} zl \quad X_j^k \; (f_j(d,z,0) - u^k)} \qquad \textbf{(A3)}$$

Under the assumption of convexity, at the optimal solution (Bazaraa and Shetty, 1979)

$$u^k(d,0^k) = L^k \; (u\backslash z',X^{\#}) \qquad \text{(A4)}$$

Substituting (A2.a) and (A3) into (A4) leads to:

$$\mathbf{u^k(d,\wedge^k) = \sum_{j \in} 2\wedge \quad X_j^k \; f_j<d,z,0^k)} \qquad \textbf{(A5)}$$

APPENDIX B. IDENTIFICATION OF ACTIVE SETS

All the candidate active sets n_{AS} in problem (4) are given by those combinations of the binary variables y_j $j \in J$ which have n+1 non-zero values and satisfy the equations in (5)

To identify the potential active sets it is convenient to define matrix $A=[a'_{ij}]$ which will have as components the signs of the gradients $V_z f_j(d,z,0)$. That is,

$$a_{ij} = \begin{cases} 1 & \text{if } \frac{\partial f_j}{\partial z_i} > 0 \\ -1 & \text{if } \frac{\partial f_j}{\partial z_i} < 0 \\ 0 & \text{if } \frac{\partial f_j}{\partial z_i} = 0 \end{cases} \qquad i=1,..,n,\ j \in J \tag{B1}$$

A systematic procedure to identify the potential sets of n+1 active constraints involves the following steps:

STEP 1 : Identify if there are rows m of matrix A having only one element a_{ms} that is positive or negative. Flag the corresponding columns as s.

STEP 2 : By fixing the columns s of step 1 enumerate all nx(n+1) submatrices from (A). If every row in a submatrix involves positive and negative entries, define the active set with the corresponding columns. If any row involves only positive or only negative entries no active set is associated to that sumbatrix.

In order to illustrate the steps of this procedure consider the following matrix A:

$$A = \begin{bmatrix} 1 & 1 & 0 & -1 & 1 & 1 \\ -1 & 1 & 1 & 1 & -1 & 1 \\ 0 & -1 & 1 & 0 & -1 & -1 \end{bmatrix} \tag{B2}$$

The interpretation of this matrix A is that the system is described by 6

Inequality constraints in 3 control variables. Therefore, every potential active set consists of 4 constraints.

Applying the steps of the above procedure, the following results are been obtained:

STEP 1 : Row 1 has the single element a_{u} negative and row 3 has the single element a_{33} positive. Therefore, constraints 3 and 4 are included in any potential active set:

$$\begin{bmatrix} 1 & 1 & 0 & * & - & * & 1 & 1 \\ - & 1 & 1 & 1 & 1 & - & 1 & 1 \\ 0 & -1 & & 1 & & 0 & -1 & -1 \end{bmatrix} \qquad \text{(B3)}$$

STEP 2 : The following 4x3 matrices are then enumerated to identify the 5 active sets:

ACTIVE SETS

k=1 $\begin{bmatrix} 1 & 1 & 0 & -1 & * & * \\ -i & 1 & 1 & 1 & * & * \\ 0 & -1 & 1 & 0 & * & * \end{bmatrix}$ J_AM 1,2,3,4}

k=2 $\begin{bmatrix} 1 & * & 0 & - & 1 & 1 & * \\ -1 & * & 1 & 1 & -1 & * \\ 0 & * & 1 & 0 & -1 & * \end{bmatrix}$ J_A^2={ 1,3,4,5}

k=3 $\begin{bmatrix} 1 & * & 0 & -1 & & 1 \\ -1 & * & 1 & 1 & * & 1 \\ 0 & * & 1 & 0 & * & -1 \end{bmatrix}$ J_A^3={ 1,3,4,6}

k=4 $\begin{bmatrix} * & 1 & 0 & -1 & 1 & \# \\ * & 1 & 1 & 1 & -1 & \# \\ * & -1 & 1 & 0 & -1 & * \end{bmatrix}$ J/M2.3A5}

$\begin{bmatrix} * & 1 & 0 & -1 & * & 1 \\ * & 1 & 1 & 1 & * & 1 \\ * & -1 & 1 & 0 & * & -1 \end{bmatrix}$ violation:{2,3,4,6}

k=5 $\begin{bmatrix} * & * & 0 & -1 & 1 & 1 \\ * & * & 1 & 1 & -1 & 1 \\ * & * & 1 & 0 & -1 & -1 \end{bmatrix}$ J_A^5={3,4,5,6}

APPENDIX C. ON THE CONVERGENCE OF BILINEAR MODELS

Proposition **1:** If the feasibility test problem in (20) has a unique solution $0^{k<1}$ for different values of the design variables d, then the solution of the design problem in (P^{λ}) provides the optimal redesign values, and therefore convergence is achieved in one single iteration.

Proof: Since for bilinear models the multipliers A_j^k are only functions of the uncertain parameters *6,* at the unique solution 0^M of (20) the multipliers \\$6_j^{Ky}$) are constants. In addition, from (19) for $d=d^{k>l}$ and $d=d^E+Ad$, yields:

$$u^k(d,0^M) = T_{j\in J_A^{*k}} \; {}^{x}\wedge^{kJ}_{I}> \; C \; {}^{N}<0^M> \; {}^{+} \; K_J(d^E+Ad) \;]$$

(CD

$$\bullet \sum_{j\in J_A^k} \lambda_j^k(\theta^{k,1}) \; [\; N_j(\theta^M) + K_j d^E \;] + \sum_{j\in J_A^k} \lambda_j^k(\theta^{k,1}) \; K_j \Delta d$$

$$= u_o^k(d^E,\theta^{k,1}) + \sum_{J6Jl} \lambda_j^k(\theta^{k,1}) \; K_j \Delta d$$

where $u_o^k(d^E,0^M)$ is the value of the feasibility function evaluated at the point $(d^E,0^M)$, which is a constant number. Since (CD is only a function of Ad, the solution of problem (P^{λ}) will set this equation to a non-positive value. Hence, convergence to an optimal and feasible design for all 0€T(F) will be achieved in one iteration of the algorithm.

REFERENCES

1. Bazaraa, M. S. and C. M. Shetty, *Nonlinear programming : Theory and Applications,* John Wiley & Sons, New York, 1979.

2. Bereanu, B., "Some numerical methods in stochastic linear programming under risk and uncertainty," *in Stochastic Programming, M.A.H. Dempster (ed.), Academic Press,* 1980.

3. Cabano, L J., "Retrofit projects - The ultimate management challenge," *Chem. Eng. Pr.,* p. 27, April 1986.

4. Calandranis, J. and G. Stephanopoulos, "Structural operability analysis of heat exchanger networks," *Chem. Eng. Res. Des.,* Vol. 64, p. 347, 1986.

5. Douglas, J. M., "Process Operability and Control of Preliminary designs," *Process Control 2, Proc. Eng. Found., Sea Island, GA,* 1982.

6. Edgar, T. F., and D. M. Himmelblau, *Optimization of chemical processes,* Me Graw Hill, New York, NY, 1988.

7. Grossmann, I. E., K. P. Halemane and R. E. Swaney, "Optimization strategies for flexible chemical processes," *Comp. Chem. Eng.,* Vol. 7, No. 4, p. 439, 1983.

8. Grossmann, I. E. and M. Morari, "Operability, Resilience and Flexibility: process design objectives for a changing world," *Proc. 2nd Int. Conf., FOCAPD, CACHE,* p. 937, 1984.

9. Grossmann, I. E. and C. A. Floudas, "Active constraint strategy for flexibility analysis in chemical processes," *Comp. Chem. Eng.,* Vol. 11, No. 6, p. 675, 1987.

10. Grossmann, I. E., A. W. Westerberg and L T. Biegler, "Retrofit Design of processes," *Proc. FOCAPO, Salt Lake City, UT,* 1987.

11. Halemane, K. P. and I. E. Grossmann, "Optimal Process Design under uncertainty," *A.I.Ch.E. J.,* Vol. 29, p. 425, 1983.

12. Kotjabasakis, E. and B. Linnhoff, "Sensitivity tables for the design of flexible processes- How much contingency in heat exchanger networks is cost-effective ?," *Chem, Eng. Res. Des.,* Vol. 64, p. 197, 1986.

13. Madsen, K., and H. Schaer-Jacobsen, "Linearly constrained minimax optimization/' *Math. Prog.,* Vol. 14, p. 208, 1978.

14. Swaney, R. E. and I. E. Grossmann, "An index for operational flexibility in chemical process design. Part I : Formulation and theory.," *A.I.Ch.E. J.,* Vol. 31, p. 621, 1985.

15. Swaney, R. E. and I. E. Grossmann, "An index for operational flexibility in chemical process design. Part II : Computational algorithms.," *A.I.Ch.E. J.,* Vol. 31, p. 631, 1985.

16. Pai, C. D. and R. R. Hughes, "Adaptations of the Han-Powell algorithm for process design under uncertainty/' *Comp. Chem. Eng.,* Vol. 11, No. 6, p. 695, 1987.

17. Pistikopoulos, E. N. and I. E. Grossmann, "Optimal retrofit design for improving process flexibility in linear systems," *to appear in Comp. Chem. Eng.,* 1988a.

18. Pistikopoulos, E. N. and I. E. Grossmann, "Stochastic optimization of flexibility in retrofit design of linear systems," *accepted in Comp. Chem. Eng.,* 1988b.

19. E. N. Pistikopoulos, "Systematic procedures to improve process flexibility in retrofit design," *Ph.D. Thesis, Dept. Chem. Eng., Carnegie-Mellon Univ, Pittsburgh,* 1988.

20. Reinhart, H. J. and D. W. T. Rippin, "The design of flexible batch chemical plants," *A.I.Ch.E. Spring Meeting, Houston, Texas,* 1985.

21. Schrage, L, *Linear, Integer and Quadratic Programming with UNDO,* Scientific Press, Pallo Alto, CA, 1984.

Table 1: Data for uncertain parameters for example 3

Uncertain Parameter	Nominal Value	Positive Deviation	Negative Deviation
θ	θ^N	A0*	A0-
F_o (kmol/s)	0.45	0.5	0.08
M_o <Kg/Kmol)	125.0	10.0	10.0
M_R (Kg/Kmol)	5.0	6.0	1.0
k_f ($x10^4$)	12.0	0.1	0.2

Table 2: Specification inequalities and economic data for example 3

Retrofit cost: $AW^{D} + 10\ AH^{\#} + 10AQ^{\#}$ ($\$10^{2}$/yr)

Specification inequalities

(i) $-AP_{v} * AP_{mm} \pounds 0$

(ii) $W - W° \pounds 0$

(iii) $0.5Q' - Q \leq 0$

(iv) $235F - (31.4-MJF_{D} \pounds 0$

(v) $(31.4-MJF_{D} - 294F_{o} \leq 0$

Table 3: Turbine data for example 4

TURBINE 1	
Maximum generative capacity	6250 KW
Minimum load	2500 KW
Maximum inlet flow	192,000 lb/h
Maximum condensate flow	12,000 lb/h
Maximum internal flow	132,000 lb/h

TURBINE 2	
Maximum generative capacity	9000 KW
Minimum load	3000 KW
Maximum inlet flow	244,000 lb/h
Maximum 62 psi exhaust	142,000 lb/h

Table 4: Data for example 4

Steam header data

Header	Pressure	Temperature	Enthalpy
HP steam	635 psig	720 F	1359.8 Btu/lb
MP steam	195 psig	130 F	1267.8 Btu/lb
LP steam	62 psig	130 F	1251.4 Btu/lb
condensate	--	--	193.0 Btu/lb

Current production level

Electric power	12800KW
MP steam	271536 lb/h
LP steam	100623 lb/h

Table 5: Data for uncertain parameters and economic **data for example 4**

Data for uncertain parameters

Uncertain Parameter	Nominal Value	Positive Deviation	Negative Deviation
8	θ^N	*Ad**	A0-
η_1	0.70	0.05	0.05
$'_2$	0.65	0.04	0.04
Power demand	10,850 <KW)	9,150	850
MP demand	200,000 (Ibm/h)	100,000	50,000
LP demand	90,000 (Ib/h)	50,000	10,000

Cost data

..	Fixed ($)	Variable
Boiler	80,000	2 **S/Ibh*[1]**
Electric power	40,000	0.20 $/KW
Turbine 1	45,000	0.25 $/KW
Turbine 2	35.000	0.20 $/KW

Table 6: Inequality constraints, feasibility test and economic data for example 5

Retrofit cost: 5 w1 + AA^ * 5 w2 + AA_2^+ ($\$10^3$)

Specification constraints	Feasibility **Test**
T_a - **480** £ 0	**-36.78**
420 - T_β ≤ 0	**-13.55**
T_{c2} - T_B ≤ 0	**-5.25**
385 - T_H ≤ 0	**-19.68**
430 - T_{c2} £ 0	**0.676**
T_H - 410 ^ 0	**5.764**

FIGURES

- Figure 1: Feasible region of the existing design for example 1.
- Figure 2: Feasible region of optimal redesign for example 1.
- Figure 3: Feasible region of the existing design for example 2.
- Figure 4: Feasibility functions of the existing design for example 2: (a) active set 1, (b) active set 2
- Figure 5: Feasible region of optimal redesign for example 2.
- Figure 6: Feasibility functions of optimal redesign for example 2: (a) active set 1, (b) active set 2
- Figure 7: Flowsheet of a reactor-recycle compressor process system of example 3.
- Figure 8: Steam and power system of example 4.
- Figure 9: Proposed superstructure for the steam and power system of example 4.
- Figure 10: Optimal redesign for the steam and power system of example 4.
- Figure 11: Heat exchanger network of example 5.

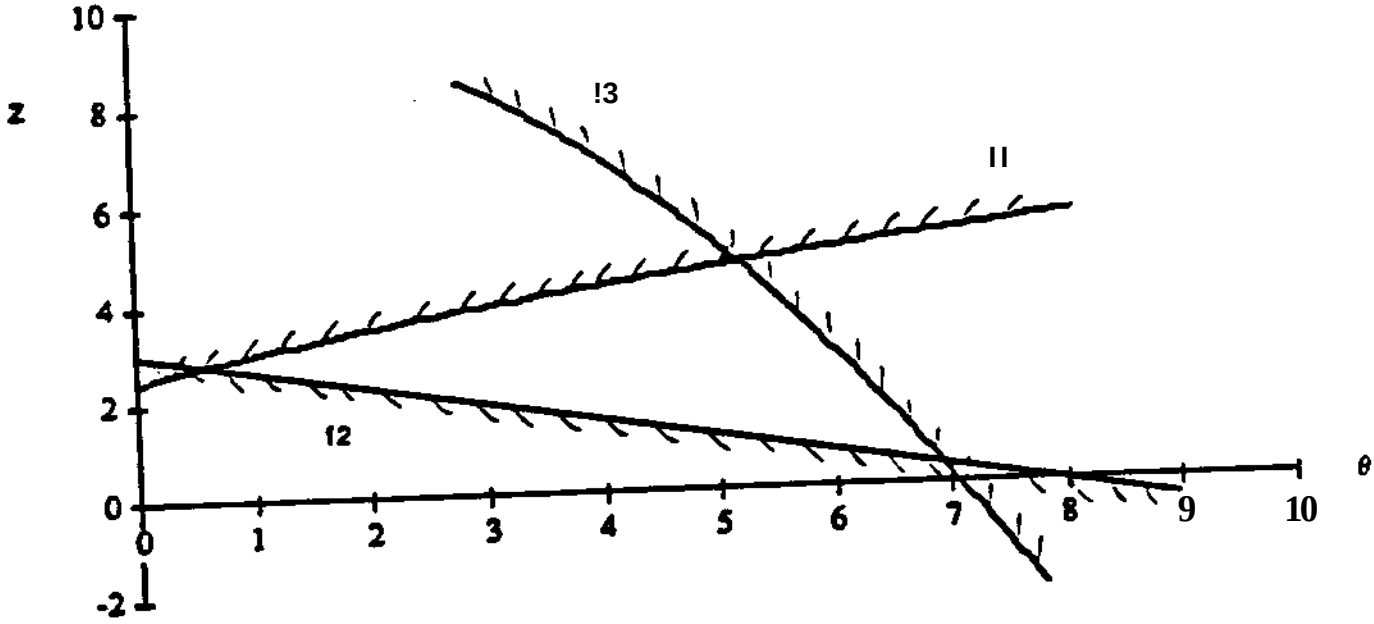

Fig. 1

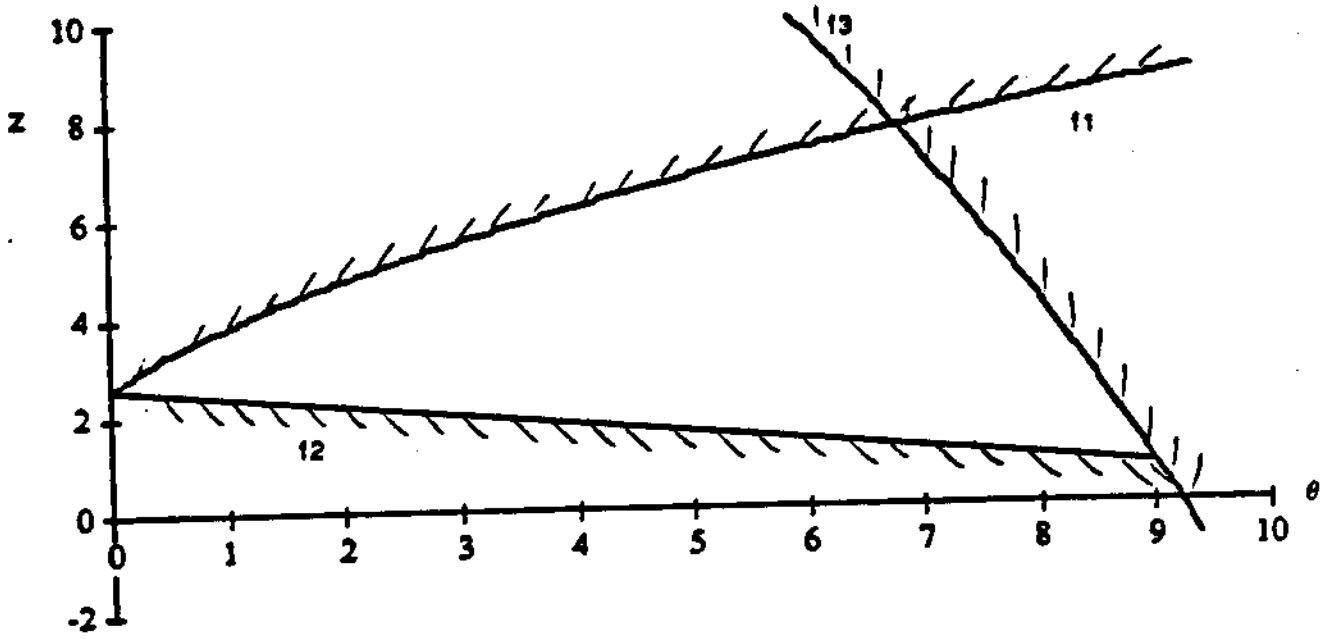

Fig. 2

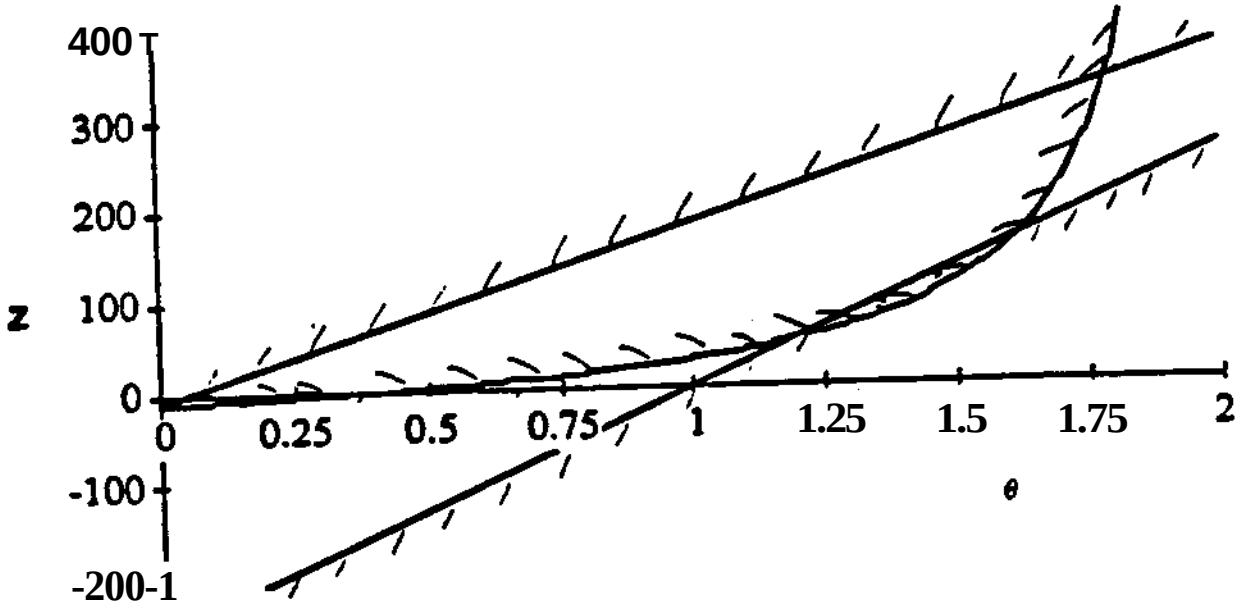

Fig. 3

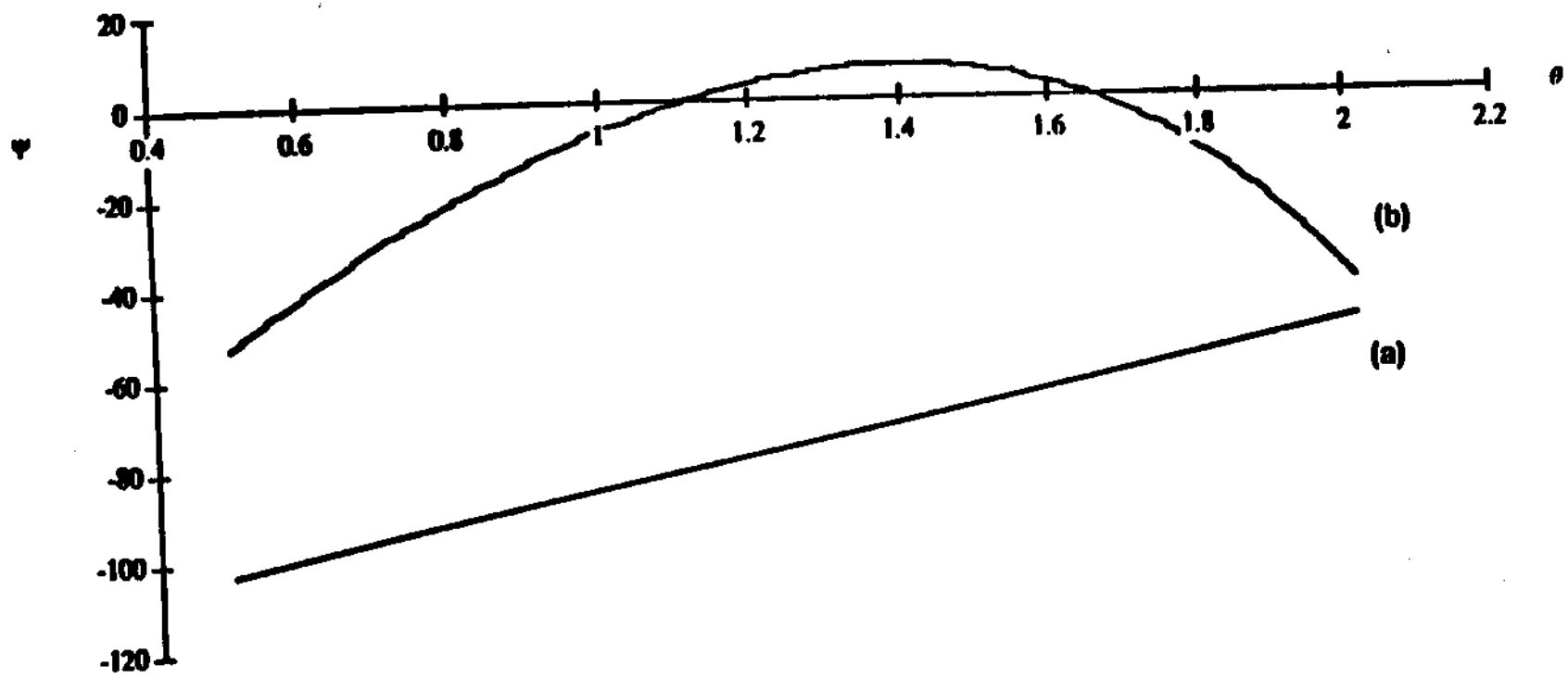

Fig 4

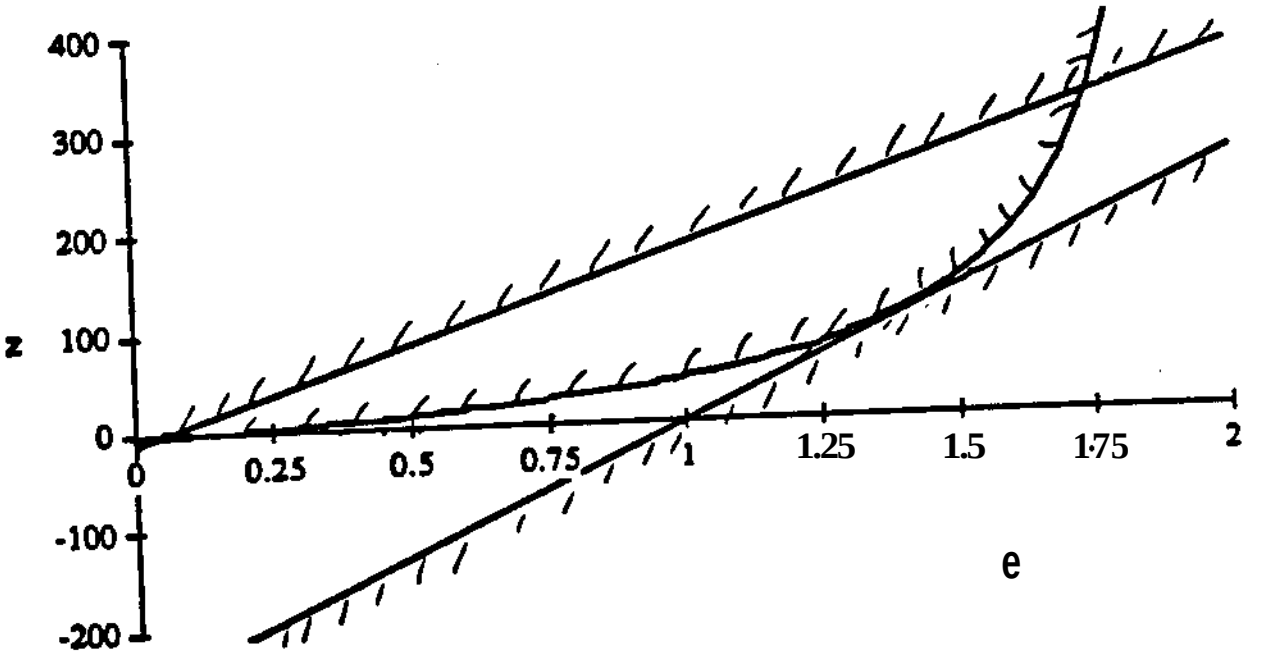

Fig. 5

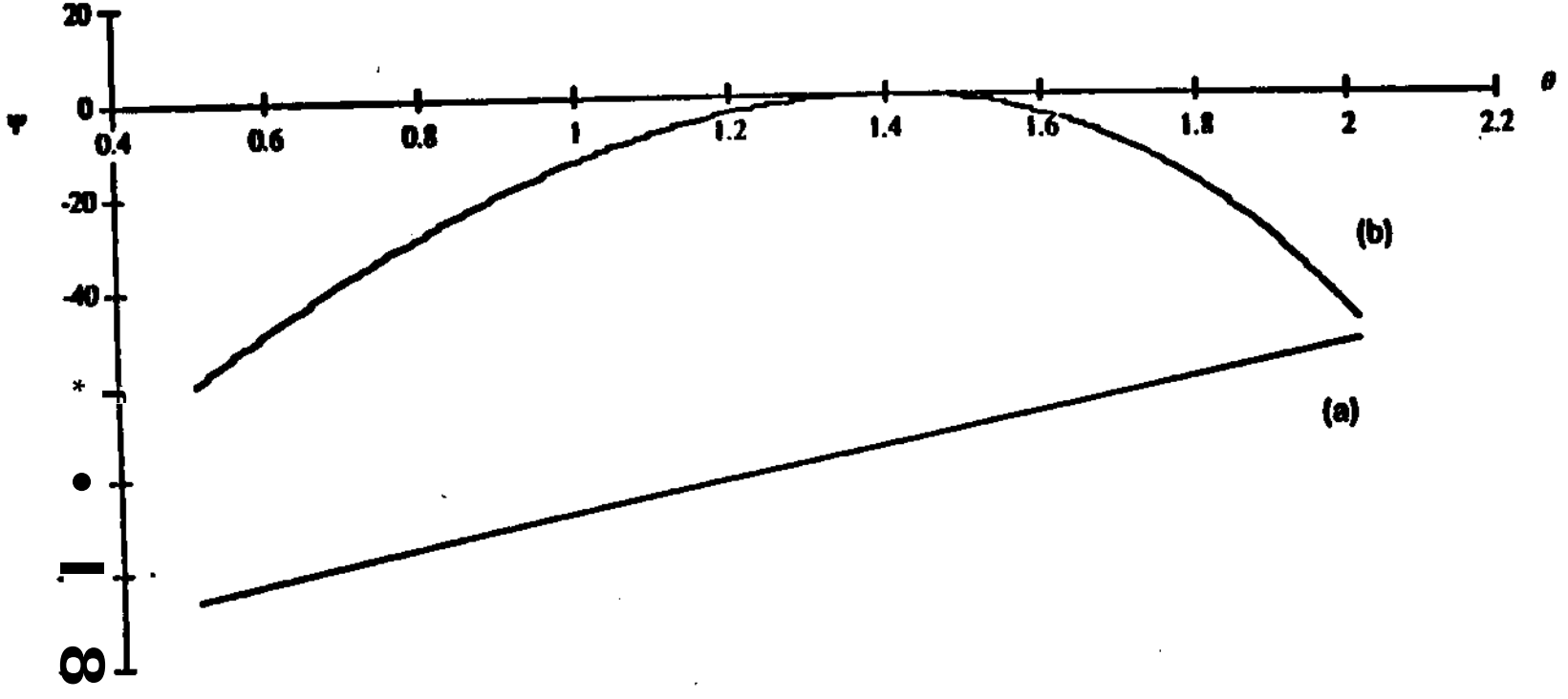

Fig. 6

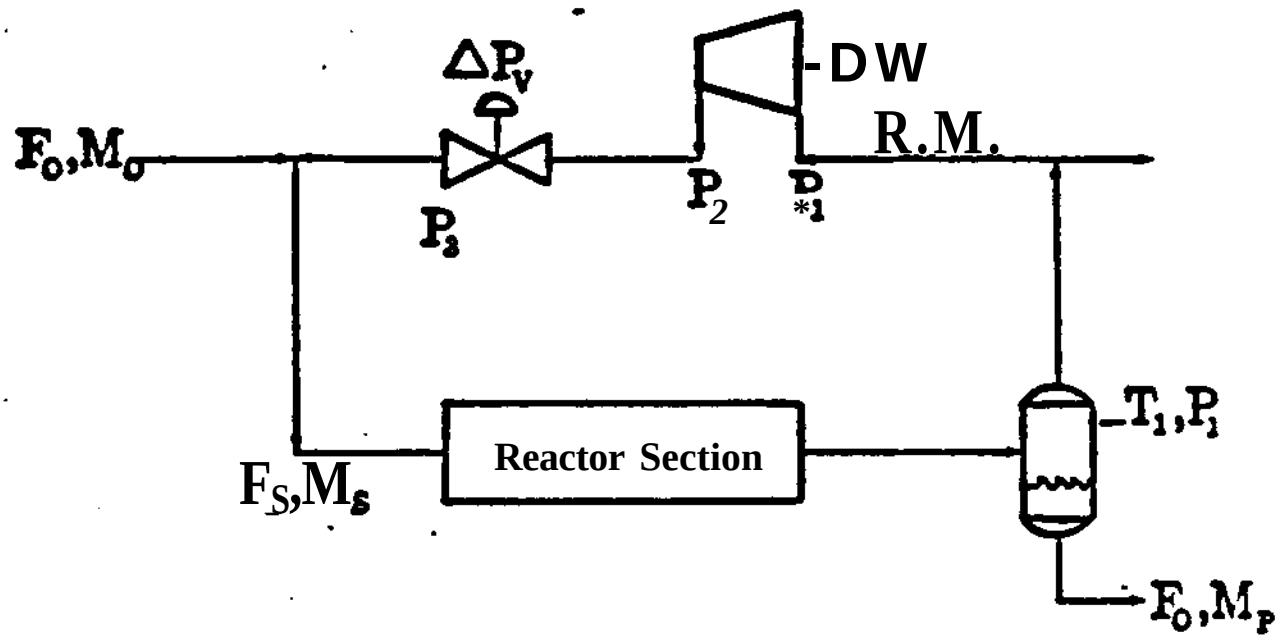

Fig. 7

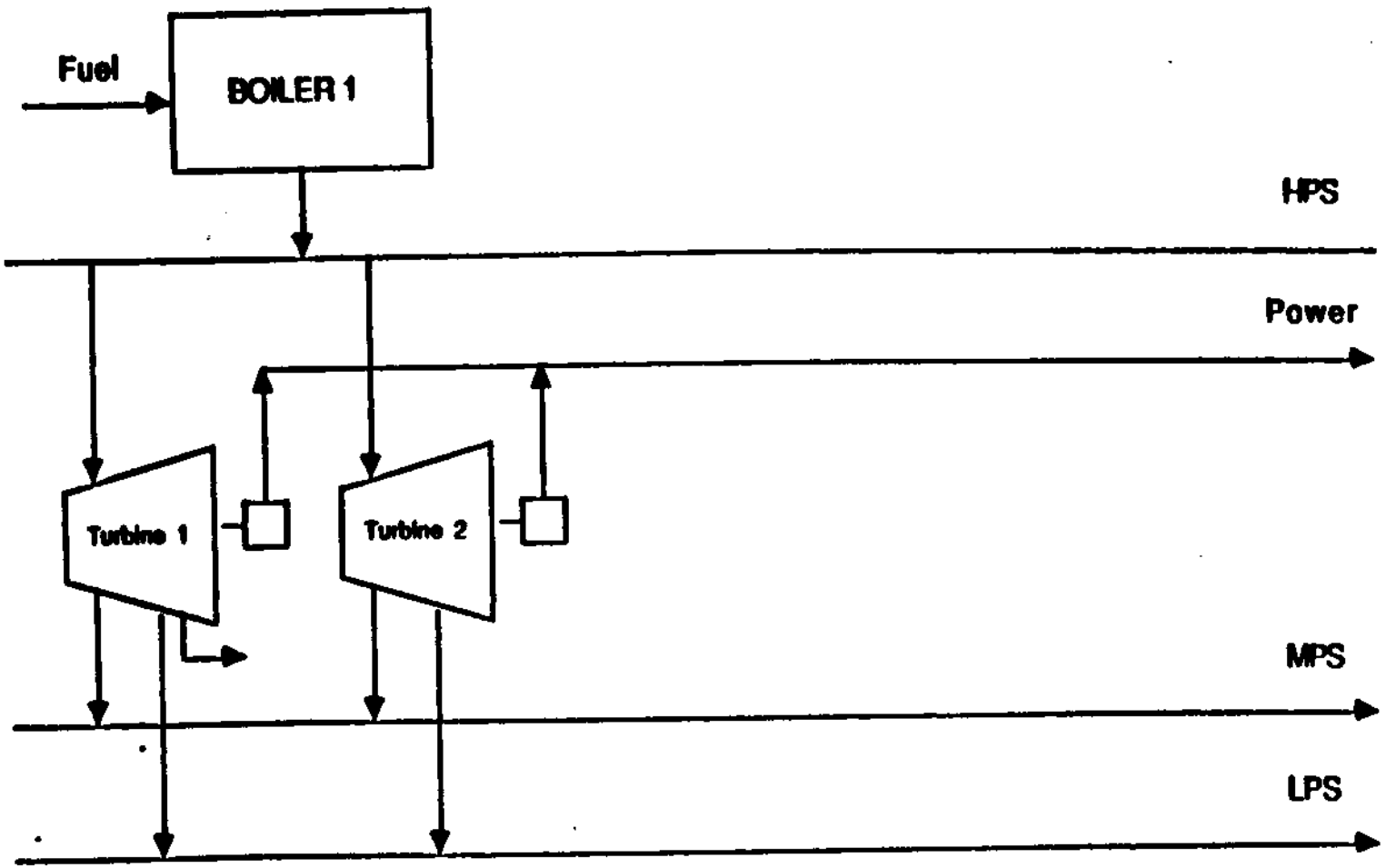

Fig. 8

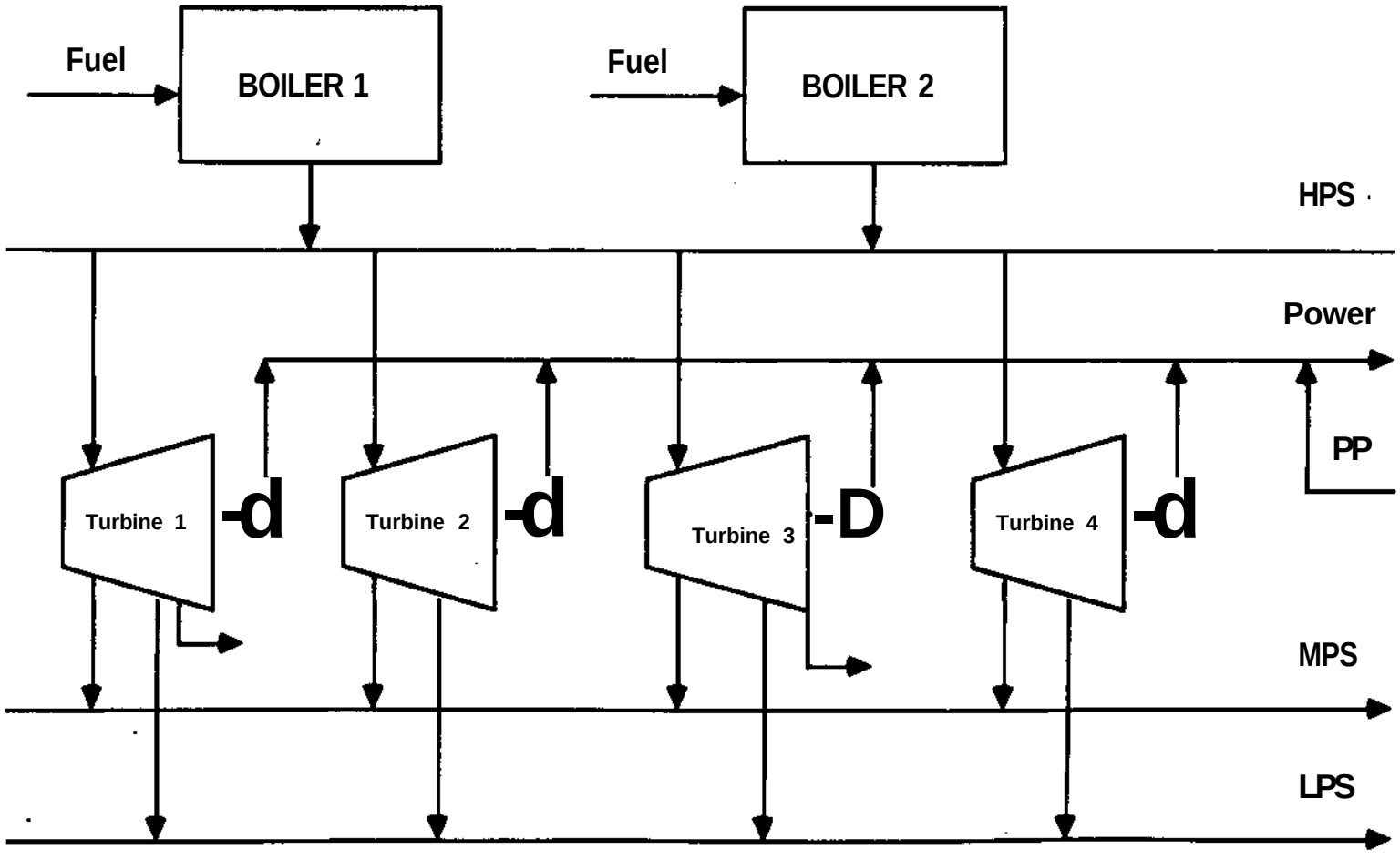
Fuel
BOILER 1
Fuel
BOILER 2
HPS
Power
PP
Turbine 1
-d
Turbine 2
-d
Turbine 3
-D
Turbine 4
-d
MPS
LPS

Fig. 9

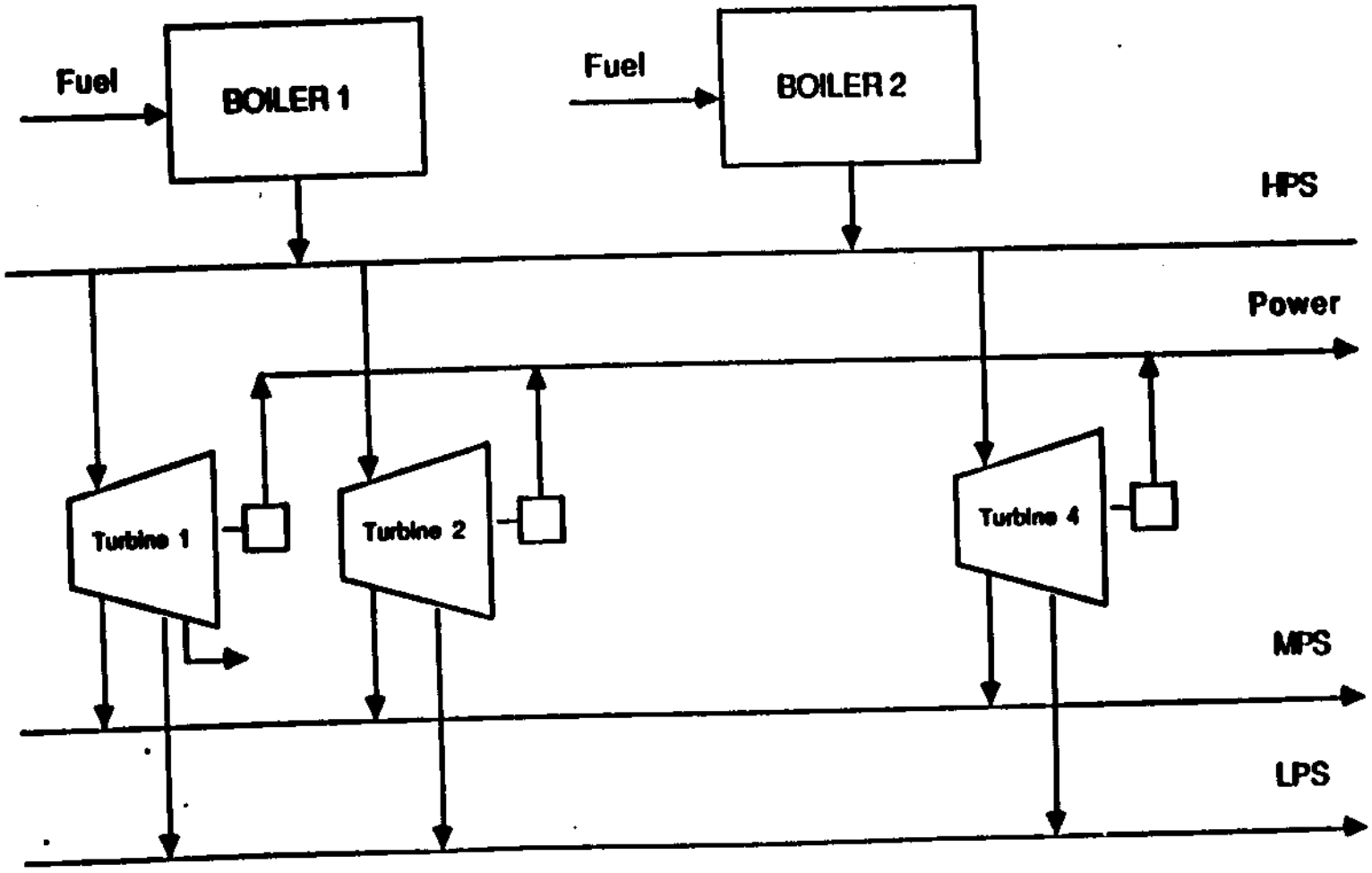
Fuel
BOILER 1
Fuel
BOILER 2
HPS
Power
Turbine 1
Turbine 2
Turbine 4
MPS
LPS

Fig. 10

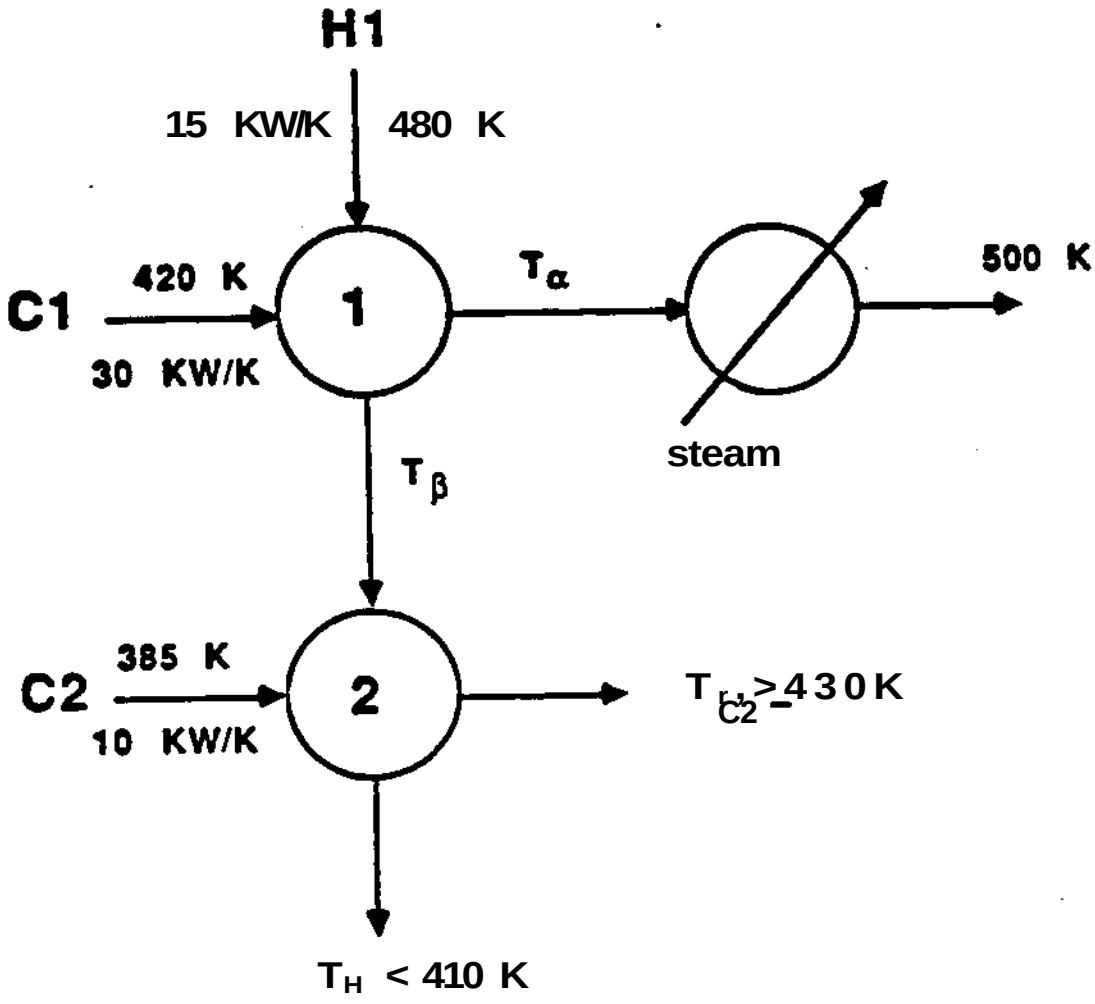
H1
15 KW/K
480 K
C1
420 K
30 KW/K
1
T_α
500 K
steam
T_β
C2
385 K
10 KW/K
2
$T_{C2} > 430$ K
$T_H < 410$ K

Fig. 11