Carnegie Mellon University
Research Showcase

Department of Electrical and Computer Engineering

Carnegie Institute of Technology

1-1-1983

A review of the synthesis of distillation based separation systems

Arthur W. Westerberg
Carnegie Mellon University

Follow this and additional works at: http://repository.cmu.edu/ece

Recommended Citation
Westerberg, Arthur W., "A review of the synthesis of distillation based separation systems" (1983). *Department of Electrical and Computer Engineering.* Paper 100.
http://repository.cmu.edu/ece/100

This Technical Report is brought to you for free and open access by the Carnegie Institute of Technology at Research Showcase. It has been accepted for inclusion in Department of Electrical and Computer Engineering by an authorized administrator of Research Showcase. For more information, please contact research-showcase@andrew.cmu.edu.

NOTICE WARNING CONCERNING COPYRIGHT RESTRICTIONS:
The copyright law of the United States (title 17, U.S. Code) governs the making of photocopies or other reproductions of copyrighted material. Any copying of this document without permission of its author may be prohibited by law.

A REVIEW OF THE SYNTHESIS OF DISTILLATION BASED SEPARATION SYSTEMS

by

A.W. Westerberg

December, 1983

DRC-06-50-83

A REVIEW OF THE SYNTHESIS OF DISTILLATION BASED SEPARATION SYSTEMS

Arthur W. Westerberg

The last dozen years have produced almost 50 English language articles on the synthesis of separation systems (Nishida, et al (1981)). Host work has considered separating a single relatively ideal mixture into sharply split, usually pure component products using systems of single feed, two product distillation columns. Of late the work has considered heat integrating these columns to reduce energy consumption. Present research will very likely produce valuable results for non sharp separations*

Earlier approaches developed both algorithmic and heuristic based tree search algorithms for discovering the better systems of non heat integrated columns. New results permit the design of heat integrated systems.

The paper reviews the above developments.

Paper presented at 25th CONICET Anniversary International Conference on New Developments Toward Technologies with Low Energy Requirements, INTEC, Santa Fe, Argentina, August 1983.

UNIVERSITY LIBRARIES
CARNEGIE-MELLON UNIVERSITY
PITTSBURGH, PENNSYLVANIA 15213

1. INTRODUCTION

In this presentation we shall review much of the work done in the last two decades on the synthesis of separation systems. We shall restrict ourselves to distillation technology. First we define, as Rudd and Watson (1968) did some 15 years ago, the general separation problem which is to transform several source mixtures into several product mixtures. Interestingly enough that problem is still essentially unsolved, but recent researchers are looking more seriously at it.

Next we shall consider the restricted problem most often addressed In the literature to separate a single source mixture into several products. Focusing even more we look in particular at problems where the product sets contain nonoverlapping species with each other — i.e. are the result of "sharp" separations.

Even for this most restricted problem, the alternatives possible using distillation technology are enormous in number. Initial work looked among the combinational number of alternative sequences for least cost solutions, but where those solutions used utilities for all condenser cooling and reboiler heating. Later work considered how to select column pressures to allow for "optimal" heat integration among the columns to reduce utility requirements. Our own most recent work considers multi-effect column structures and notes one can lower bound in a practical way the utilities required to solve a given separation problem.

We finish by noting columns can be represented on a T vs Q diagram (the same diagram used for heat exchanger networks) permitting considerable insight into the design of energy efficient column sequences to solve given problems.

The General Distillation System Synthesis Problem

Figure 1 illustrates the nature of the general problem we are going to consider* Given a set of source mixtures, with amounts specified, create the cost optimal structure from distillation columns and simple stream mixers and splitters which can produce a set of specified products. The products in general can be arbitrary mixtures of the species found in the source mixtures. It is assumed the source mixtures and products are compatible, i.e. all the products desired can in total be recovered by redistributing the components available within the source mixtures.

The cost optimal solution is that solution which requires the least annualized investment costs for equipment plus annual utility costs.

Single Source Problem

Often the problem considered has only a single source which is to be split into all the desired products.

Sharp Separation Solutions

If each column separates the feed to it into products with no overlap in the components between them, it is performing a "sharp[11] separation. An example is to split a mixture containing components A,B,C and D into the pure component product A and the mixture of B,C and D. If the solution uses only columns performing sharp separations, it is a sharp separation solution.

Simple Columns

Distillation columns having one feed and producing two products are denoted as "simple" columns.

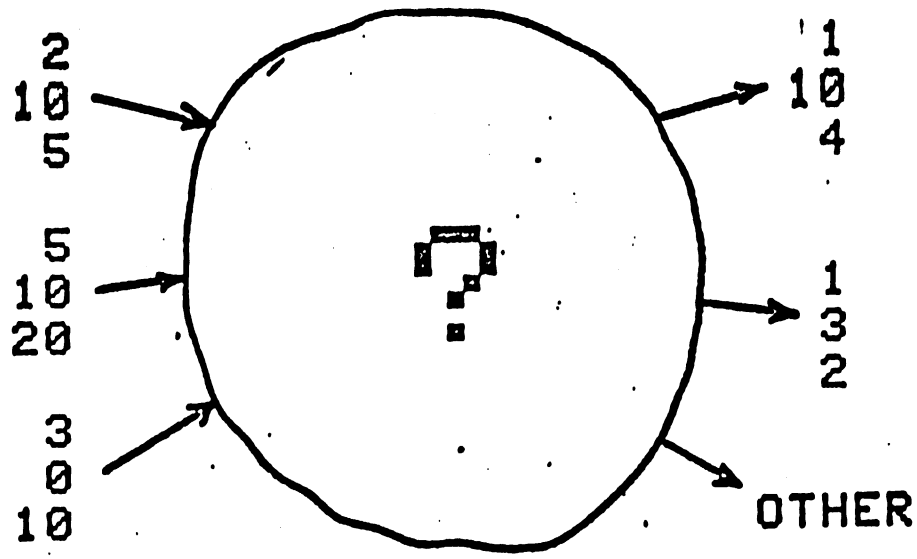

Figure 1 General Distillation System Separation Problem

The Richness of the Solution Space

Separation problems based only on distillation technology can have an enormous variety of alternate solutions. Figure 2 shows the five alternate three task sequences one can devise to separate a four component mixture into four pure components based only on simple sharp separators. Thompson and King (1972) provide the following formula to determine the number of such alternative sequences for separating an N component mixture into N pure component products.

$$\text{Ho. of Sequences} - \frac{(2(N-1))\,!}{N!\,(N-1)\,!}$$

with N=3 giving 2 sequences, 4 giving 5, and 9 giving an impressive 1430.

Figure 3 shows how one might take one of the sequences from Figure 2 and heat integrate it to reduce the consumption of utilities. Clearly several different heat integrated configurations can result for the same sequence. Figure 4 illustrates the concept of multieffect distillation where one splits the feed into two parts and separates one part in a high pressure column, the other in a Ibw pressure column. The temperature level of the high pressure column is elevated enough such that the heat ejected from its condenser is hot enough to be used as heat into the low pressure column reboiler. Figure 5 shows a complex structure one might develop based on multieffect ideas to separate a three component mixture, into three pure component products.

Finally Figure 6 shows "thermally coupled[9]' columnm configurations where the coupling is by the direct flow of material.

The question that must arise is: "how can one discover the better separation systems for the problem being solved?" Clearly the solution alternatives are enormous, particularly when one attempts to discover energy efficient solutions.

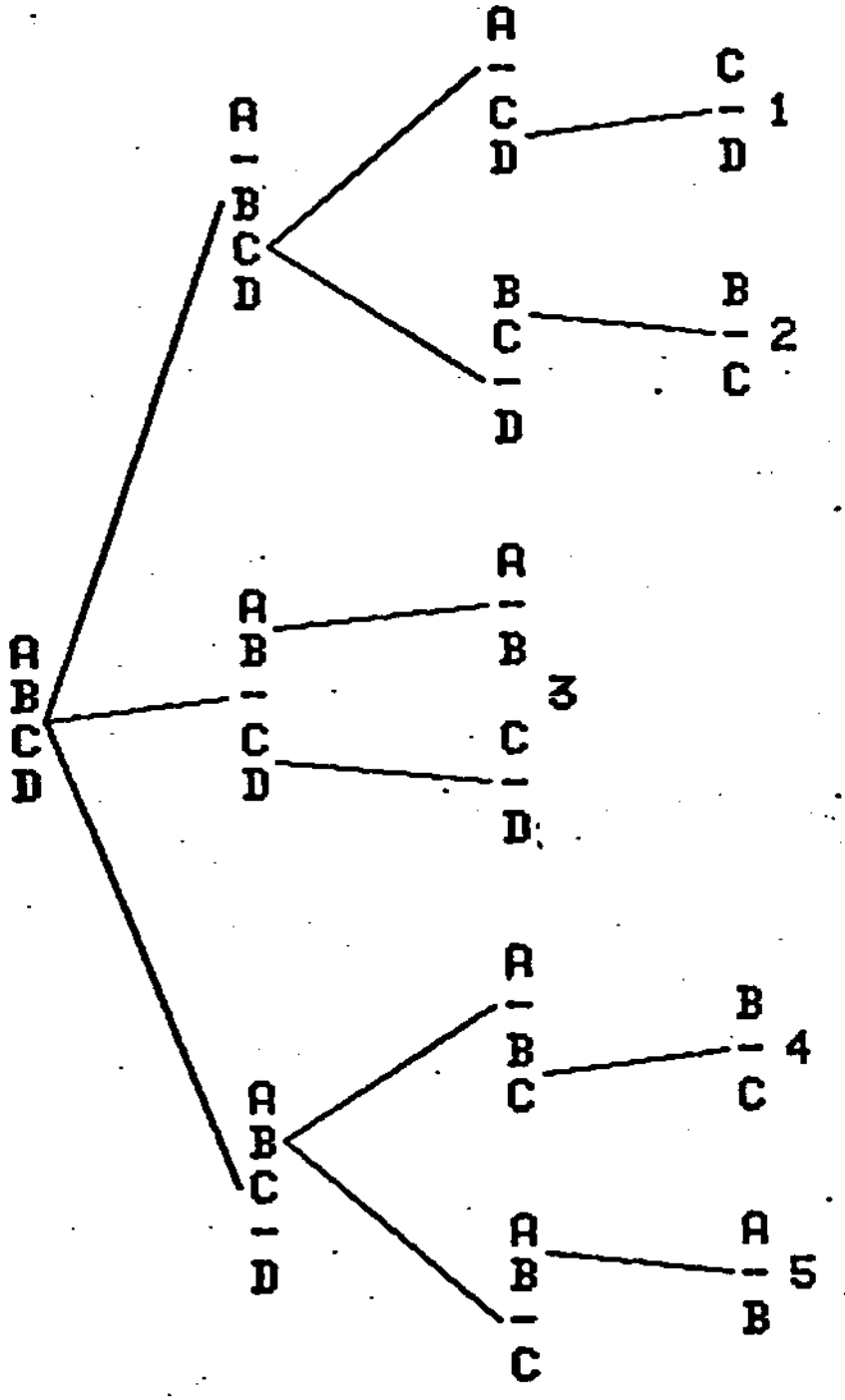

Figure 2. Five Alternative Sequences for Separating a **Four** Component Mixture

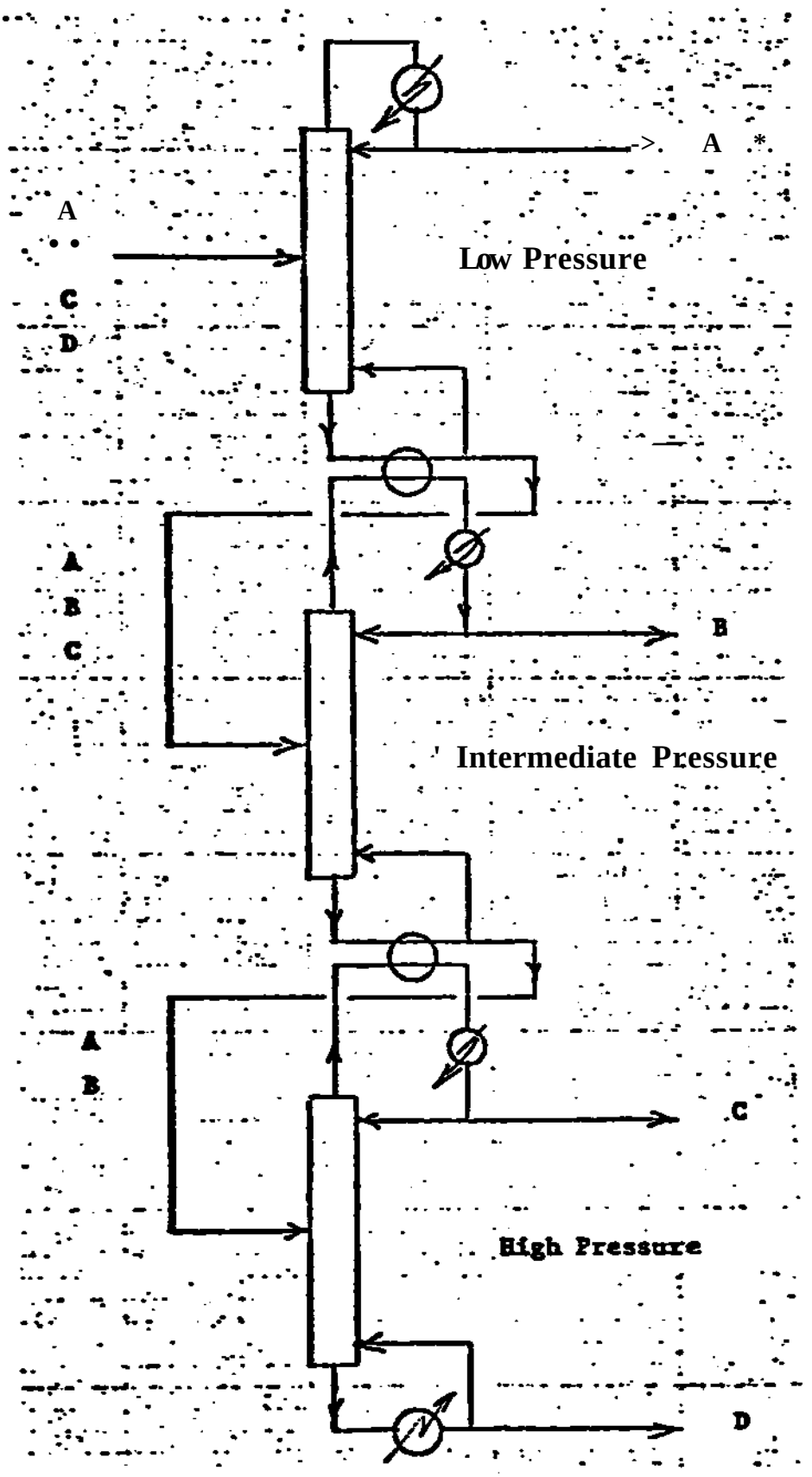

Figure 3. A Heat Integrated Sequence

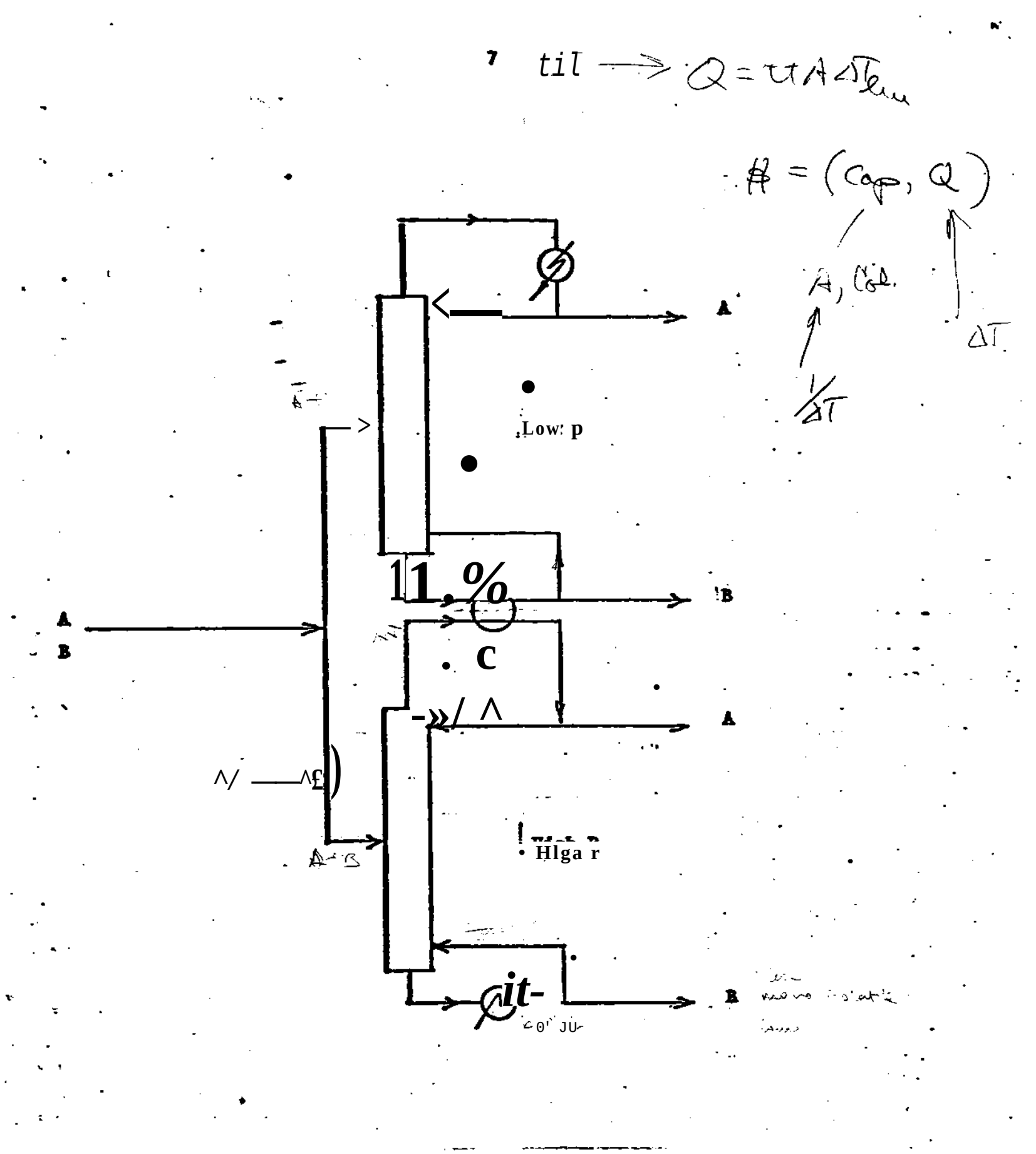

Figure 4. Multieffect Distillation

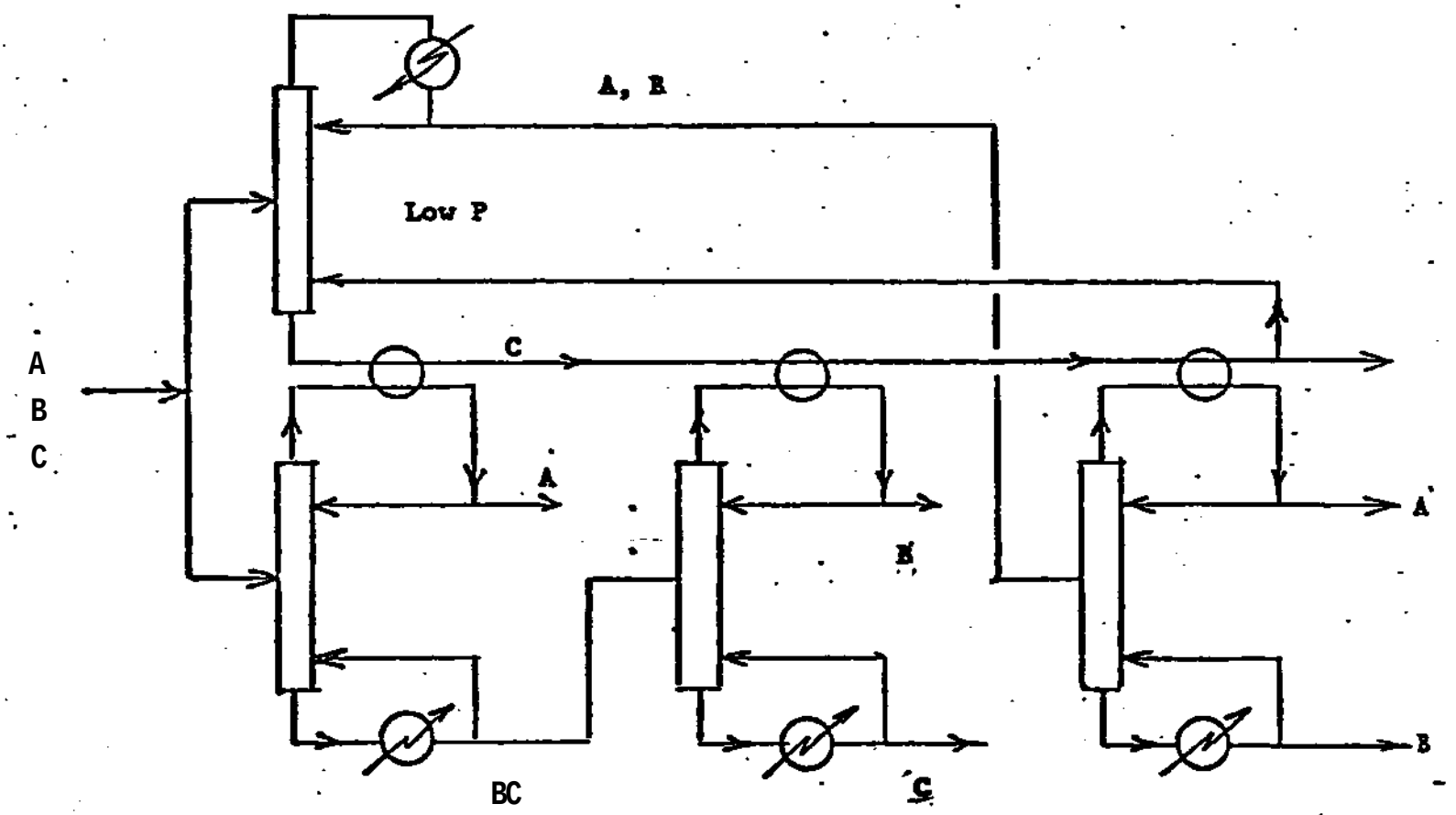

Figure 5. A More Complex Example

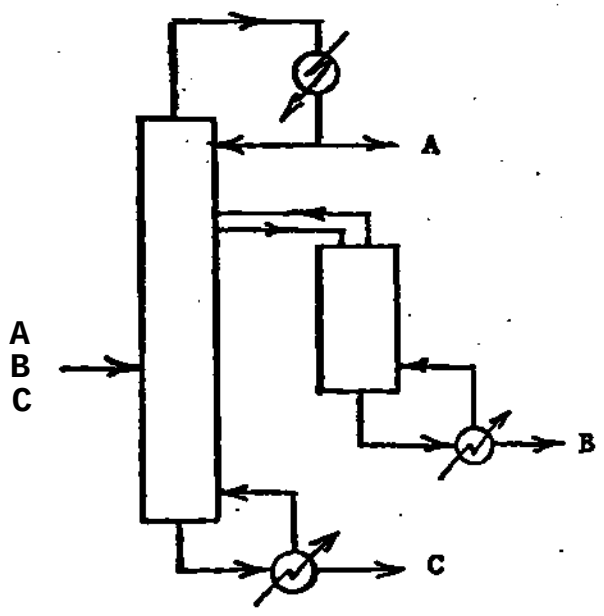

Side Stripper

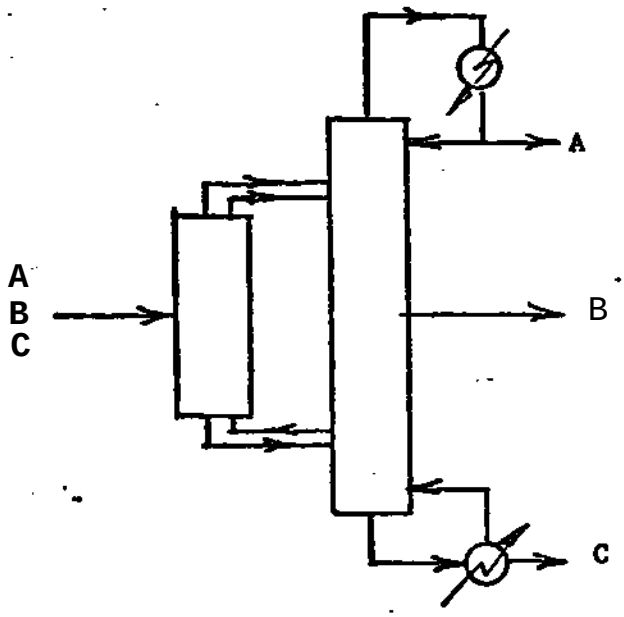

petlyuk Column Configuration

Figure 6. Thermally Coupled Column Structures

2. REVIEW OF APPROACHES TO SYNTHESIS

Simple Sharp Separations with No Heat Integration

The problem receiving the most attention has been the single source mixture to be separated into sharply split products using simple one feed/two product columns. The problem of enumerating the sequences without considering heat integration is straightforward, as Figure 2 demonstrates.

The earliest effort was by Lockhart (1947) when he examined separating a three component mixture and proposed heuristics to aid in selecting the preferred structure. Harbert (1957) considered a similar problem. Heaven (1969) continued the notion of case study to develop heuristics. A reasonable set of heuristics which were rank ordered as given here by Seader and Westerberg (1977) are: 1) (most important) separate first where the adjacent relative volatilities are large, 2) separate out plentiful components early, and 3) use the "direct sequence" of separating out the most volatile component first, then the second most volatile and so forth. Rudd, Powers and Siirola (1973) give additional heuristics: a) separate out the desired product as a top product from a column (it will then have much reduced contamination by trace heavy components), b) remove corrosive components early.

Armed with these heuristics one can often write down very quickly reasonable sequences which will prove to be close to the best sequences.

The second class of approaches was to set up the "tree" of alternatives as in Figure 2 and search for the best sequence algorithmically. Thompson and King (1972) used a heuristic, pseudo algorithmic search that was almost a branch and bound search. It could fail by cycling but, when it worked, it was very fast. Hendry and Hughes (1972) proposed a dynamic programming search algorithm. Westerberg and Stephanopoulos

(1975), Rodrigo and Seader (197S) and Gomez and Seader (1976) proposed branch and bound algorithms. Branch and bound at their worst performance vill require the effort of the dynamic programming approach and are to be preferred, with the clever approximate bounding used by Gomez and Seader making that algorithm quite effective*

Heuristic search with evolution seems to be remarkably effective, and two papers report on this approach, Seader and Westerberg (1977) and Nath and Motard (1981). Using the heuristics in the order of preference given earlier, Seader and Vesterberg generate an initial flowsheet. Often the lower level heuristics contradict the upper level ones and the second step is to interchange two adjacent separation tasks in the current structure if the interchange is supported by a lower level heuristic which was violated to generate the current structure.

Nath and Motard developed a ranking function to quantify the selection of the next separation task. It was designed to agree qualitatively with heuristics such as those above. If an alternate decision at each selection step had a value within a few percent of the best, it was subsequently made as an "evolutionary[11] change, and the structures resulting from this alternate decision were searched too.

These two methods appear to be very successful and are recommended for this special problem. (It should be noted extractive distillation is among the technologies allowed for these approaches.) They search many fewer structures, cannot guarantee finding optimal structures, but usually do find them for the problem considered here.

Heat Integrated Solutions for Above Structures

Rathore et al (1974a,b) were the first to investigate methods to discover the better sequences for the above problems if the column condensers and reboilers can be heat integrated Co reduce the use of utilities. The first paper did not allow column pressures to be selected to improve the opportunities for heat integration; the second removed this not too reasonable restriction. They developed a computationally expensive dynamic programming based search algorithm.

Sophos et al (1978) and Faith and Morari (1979) developed branch and bound methods based on bounds which can be obtained using Lagrange theory. Their algorithms too are computationally expensive.

Sophos et al (1981) argued that a two level procedure works well for developing heat integrated column sequences. First one should find the better nonintegrated sequences and then heat integrate them. They argue that the heuristics that discover the nonintegrated sequences support discovering sequences that have the best potential for heat integration. This two level approach significantly reduces the effort required to find good solutions.

Naka et al (1982) recently proposed an approach to finding heat integrated solutions based on thermodynamic "availability" arguments. They also allow process streams to be heat sources and sinks for the problem, giving a branch and bound search algorithm for this formulation.

Dunford and Linnhoff (1982) argue that a column integrated within a process should not receive heat in its reboiler above the "pinch" point and reject it below the "pinch" as such an arrangement will not reduce the requirements for utilities. Their insight is useful for examining existing or proposed processes to see if they are heat integrated rationally or not, or to place a single column into a process.

Some recent insights are from work by Andrecovich on his Ph.D. at Carnegie-Mellon University (Andrecovich and Westerberg (1983), Andrecovich (1983)). He discovered a representation for a distillation task that can be used on the same T-Q diagram that is used in heat exchanger network synthesis studies. It permits one to develop utility bounds for distillation sequences and to "see" quantitatively when the earlier heuristics will work and when they will not. We shall consider this work in more detail later.

Thermally Coupled Configurations

Petlyuk et at (1965) examined the utility requirements for the second column configuration shown in Figure 6 to separate a three component mixture into three pure component products. Stupin and Lockhart (1972) also presented a case study for this configuration along with a suggested short-cut method to determine the reflux flows for it. Both studies demonstrate significant savings in utility requirements, with 407. not uncommon*

Tedder and Rudd (1978a,b) did extensive parametric studies of such column configurations, and presented heuristics to select among them, partly in the form of composition plots to allow feed composition to be a factor in deciding. Sargent and Gaminibandara (1976) proposed a "superstructure" configuration containing virtually all the alternative thermally coupled configurations as substructures. Optimizing the superstructure was proposed as a method to discover the best substructure

* and, in later work with approximate models, was an effective approach.

The latest and a significant insight appears to be that of Hohmann (1982) in which he considers first not condensing (i.e. use a partial condenser) a top product from a column that is to feed tor & second column. This move saves both condensing costs in the first column and reboiler costs in the second* It does require the second column to operate at the same or lower pressure than the first. A small change allows one to eliminate the condenser at the top of the first column altogether by taking liquid from the second column to use as reflux to the first. One then has the topological equivalent of the first structure shown in Figure 6. Thus one can see a bit more of the evolutionary moves that might transform a noncoupled solution into a coupled one, with each move reducing the requirements for utilities. We have started at CMU to examine how to select among the alternatives by simple bounding calculations.

Multieffect Solutions

Work just completed at CMU (Andrecovich (1983) and Andrecovich and Vesterberg (1983)) was aimed at finding the better distillation sequences based on given allowable tasks. Multieffect distillation was permitted as a means to reduce energy consumption. This work resulted in 1) an approach based on a mixed integer linear programming (MILP) algorithm to find cost optimal structures, 2) an insight that allows one to determine a useful bound on the utility requirements for a given separation problem, and 3) a representation for a distillation task which permits one to visualize directly the better solutions and to see the tradeoffs among alternatives.

We shall examine some of these ideas here. Figure 7 illustrates a conventional distillation column together with a representation for it on a T vs Q diagram. The representation indicates that a column receives heat **Input** Q_D into its reboiler at temperature T_K. The column extracts work by degrading this heat to a lower temperature T_C, where it is expelled from **the** condenser. If the feed and both products are bubble point liquids and if the separation is moderately difficult, then $Q_{XV} \ll Q_C$. We can see this by observing in the heat balance the much larger size of these heats to the sensible heat difference between the feed and products. We thus can crudely characterize a column as a device which degrades $Q(= Q_D \wedge Q)$ units of heat from T_X to T_C and thereby produces separation work. (The second law efficiency is only 6 to 20% for this process so the second law does not particularly aid in establishing useful bounds.) We represent the separation task done by the column as an area $Q(T_X - T_C)$ on a T-Q diagram therefore.

If we make the apparently unjustifiable assumption that this area is pressure independent, then looking at Figure 8, we can stretch the area **between** the available AT for the utilities, with the area width representing a lower bound on utility requirements for the task. For a sequence of **tasks,** the utility bound is simply the sum of the QAT areas for the tasks stretched out between the allowable AT for the utilities. Thus, if we **want** the sequence with the least utility use, we might conjecture it is **found** by looking among the sequences whose sum of QAT for the tasks in **the** sequences are the smallest. This term "QAT" gives us a quantitative measure for characterizing a distillation task.

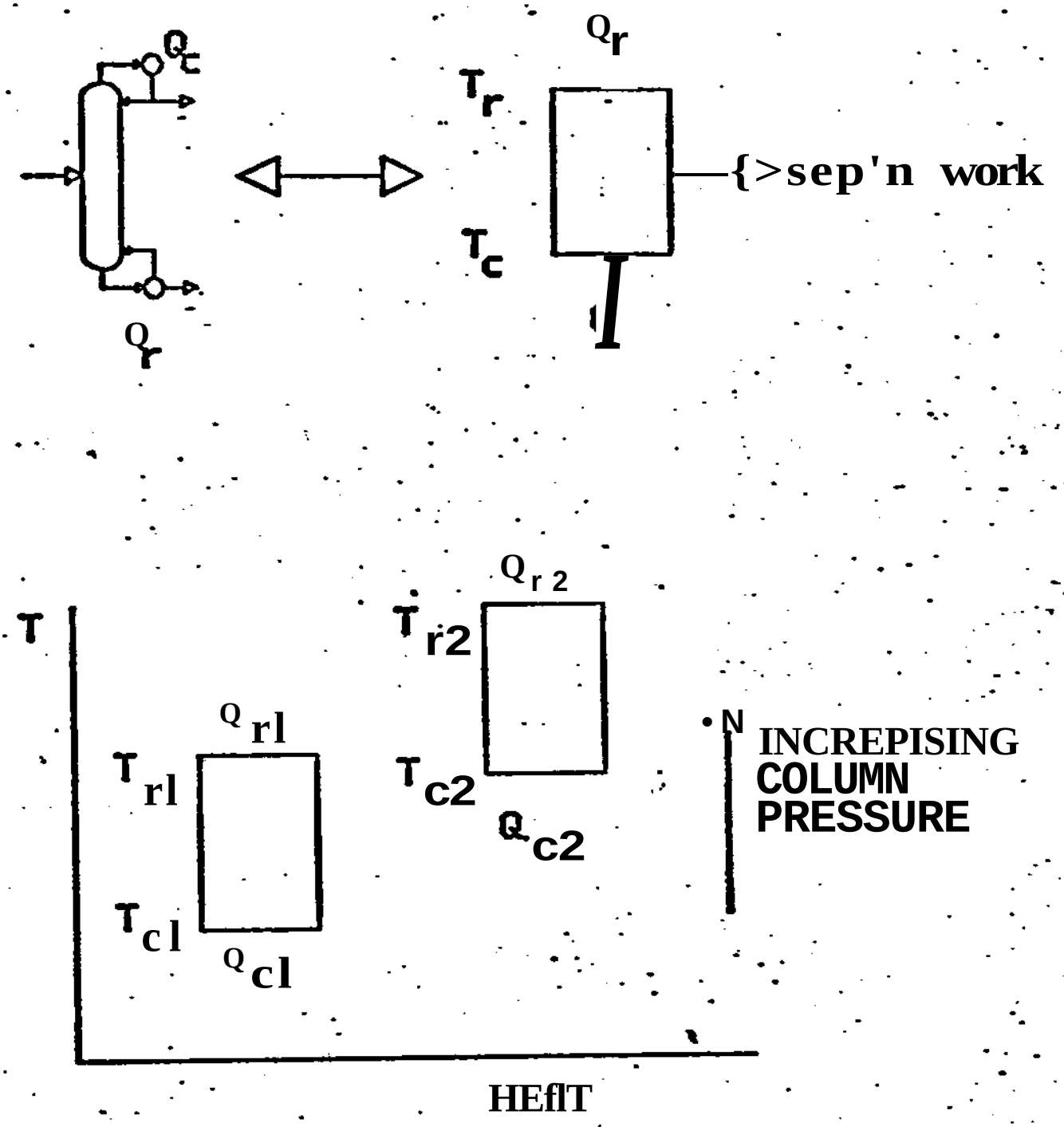

RSSUME Q*AT IS PRESSURE INDEPENDENT

Figure 7. T-Q "Representation of a Column

UTILITY BOUND

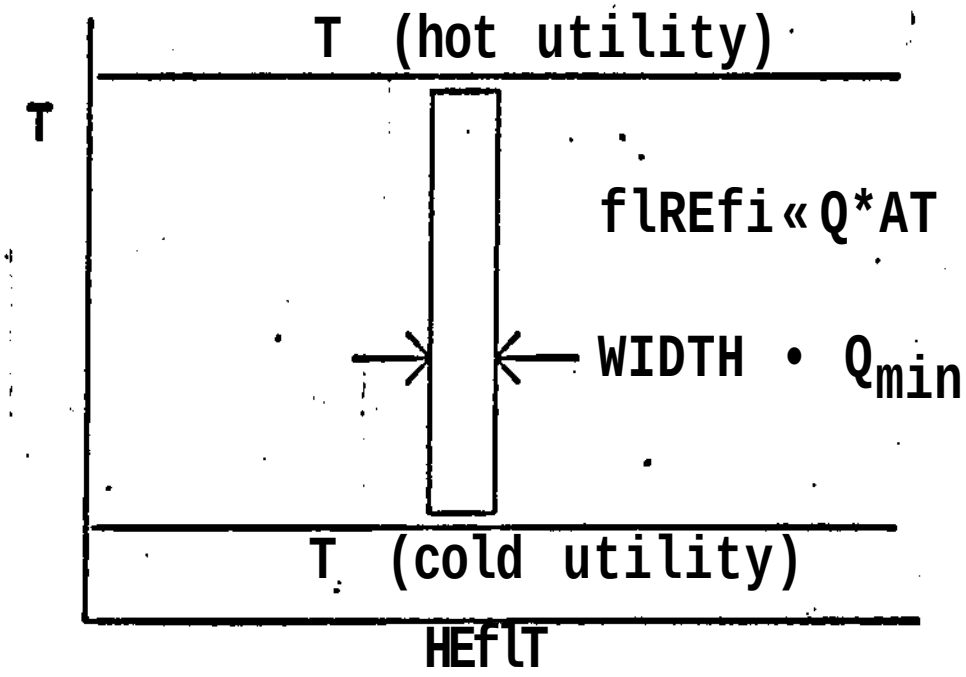

Figure 8. Minimum Utility Use Bound for a Distillation Task

Figure 9 shows how one can use the bound to discover multieffect solutions on a T-Q diagram by the simple construction process called "stacking". Each task is partitioned into vertical segments of width Q_{min}. These segments are then stacked on top of each other between the utility temperatures. The discrete nature of the problem precludes exactly fitting the columns into an area of width Q_{min}, but slightly increasing the width, say to divide the bottom task into exactly three columns, allows the stacking to be done in the allowable ΔT_{util}.

We note that the width of the stack at its widest point is the required utility use for the sequence.

Andrecovich and Westerberg extend this observation to obtain a very simple bound for a problem in which the number of columns is restricted. Figure 10 illustrates. Here three tasks 1, 2 and 3 are stacked without splitting in Figure 10b. The maximum width sets the utility requirements. To reduce this requirement, one could multieffect task 2, as illustrated in Figure 10c.

We need one added insight to aid in establishing which column to run at the lower temperatures.

The individual terms Q and ΔT are well approximated for a number of separation tasks as linearly increasing functions of T, with $Q\Delta T$ almost doubling when pressure (and thus T) for a column increases from 1 bar to 20 or 25 bars.

Thus the task which sets the utility bound, task 2 in Figure 10b and task 1 in Figure 10c, should be operated to minimize its width: 1) run it at the lowest temperature possible, 2) run it nearest to its minimum internal reflux — for example at 1.05 times its minimum internal reflux.

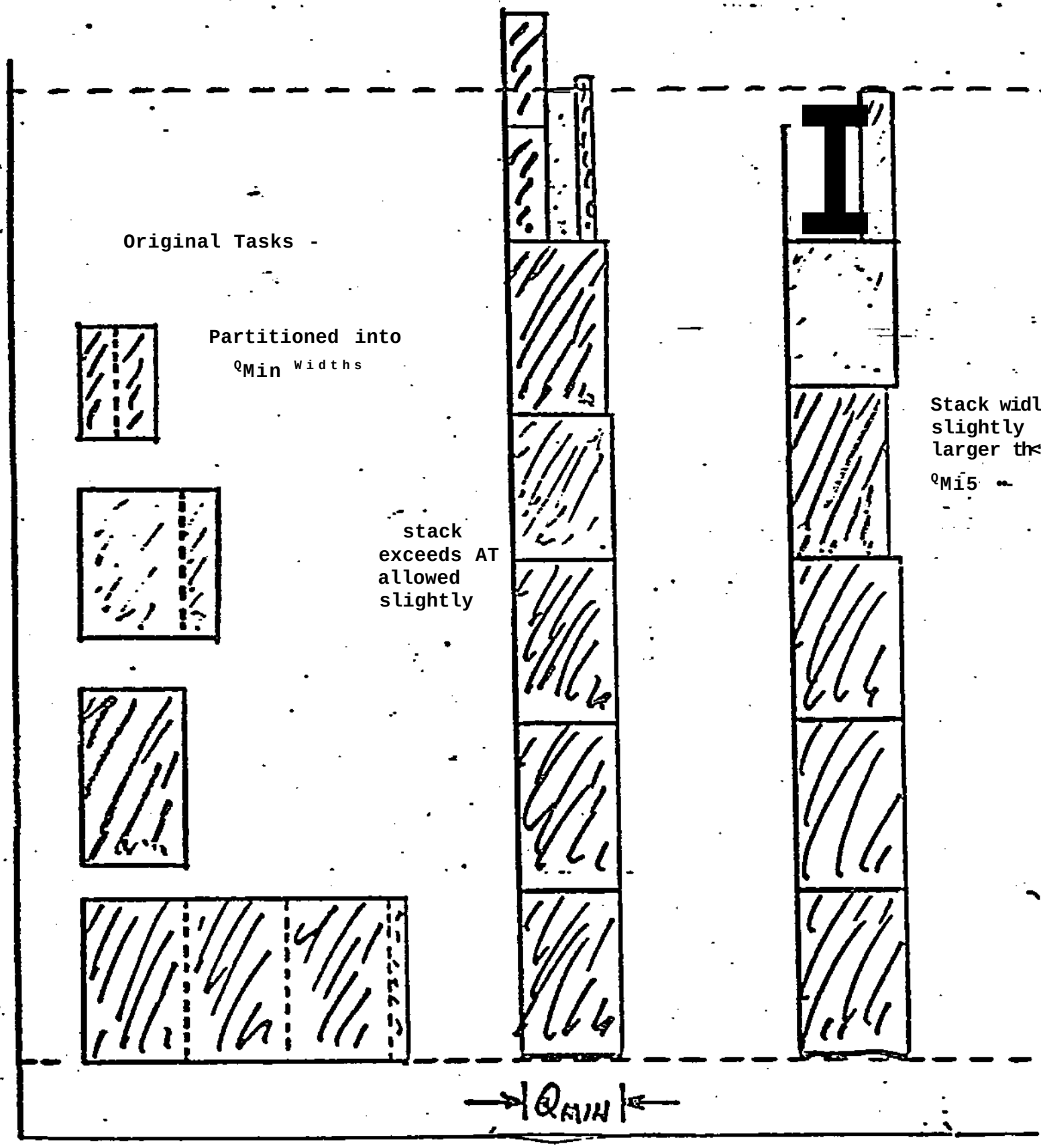

Figure 9. Stacking to Find Hinimum Utility Use Stxuctures

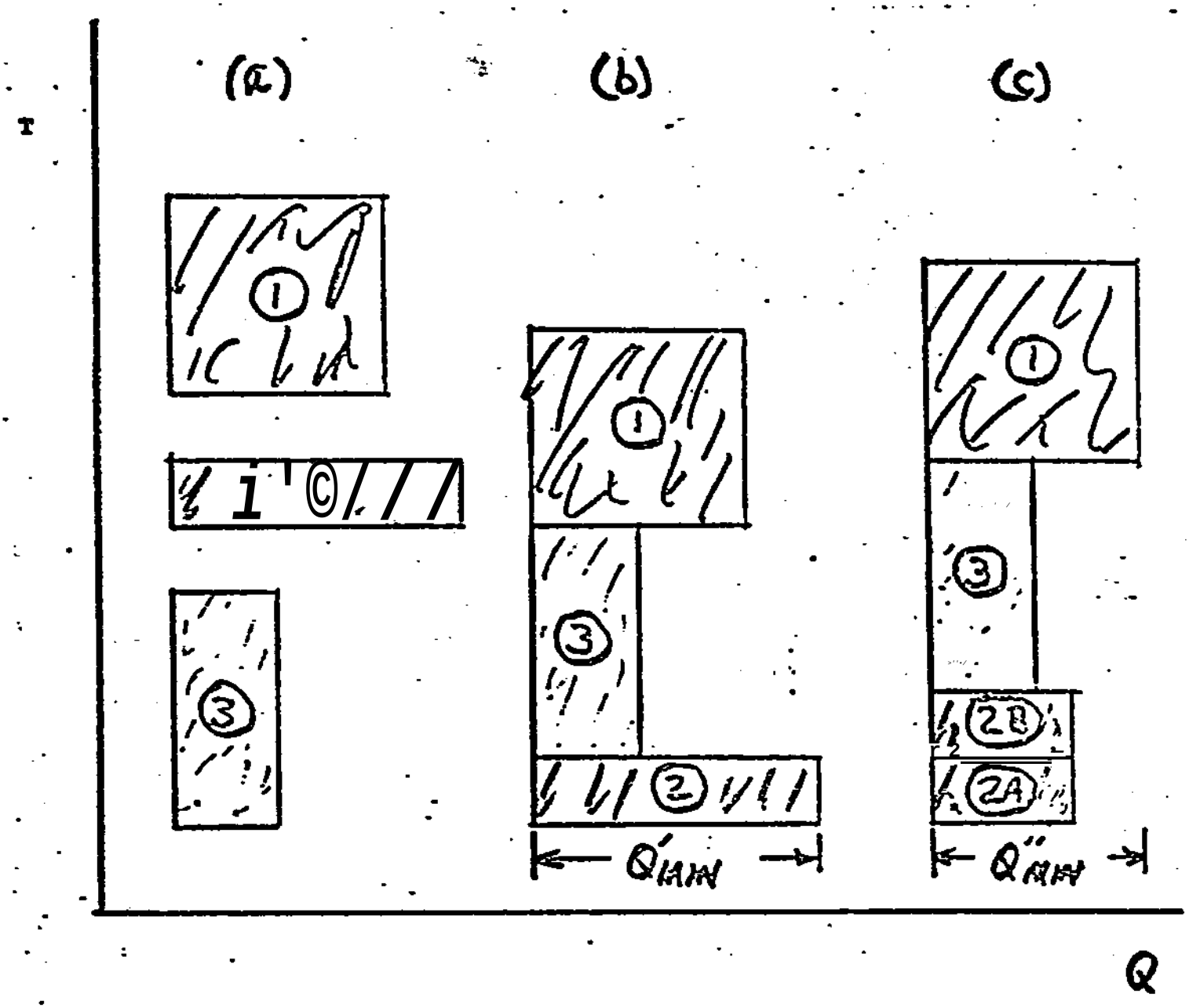

Figure 10. Stacking for Restricted Problems

Or it should be the one attacked to change the structure: 1) multieffect task 2 in Figure 10b to get the structure in Figure 10c or 2) replace task 2 by another method of separation - e.g. absorption.

As Andrecovich discusses in his thesis, QAT quantifies many of the heuristics used in distillation. The width Q establishes utility requirements, and it is larger for difficult separations and for components occurring in large amounts.

Based on new work by Hrymak in our group, we can even begin to see the implications of using side stripping columns with this construction. Figure 11 illustrates. Consider splitting ABC into pure component products using the "indirect sequence" of first splitting off C, then splitting A from B. Figure lla shows these two tasks heat integrated on a T-Q diagram. By implementing with a side stripper, we reduce the input of reboiler heat to the second column and condenser duty of the first* Figure lib illustrates. Finally no heat integrating at all gives Figure lie. Note we reduce in each step the AT across the process and increase the heat required. Nature trades first law heat for second law AT's. We clearly do not get something for nothing.

If the AT_{util} needed for lla is available, we could use it. If the AT_{util} available is less, we might squeeze in a thermally integrated structure instead, and finally, if AT_{util} is even smaller still, we cannot save on utilities.

As pointed out in Andrecovich and Westerberg, the heat degraded can be from hot process streams to cold process streams in an overall process, thus giving one a synthesis tool to integrate a separation sequence into a complete process* Figure 12 illustrates. Again the heuristic to use the sequence having the minimum sum of QAT areas appears sensible.

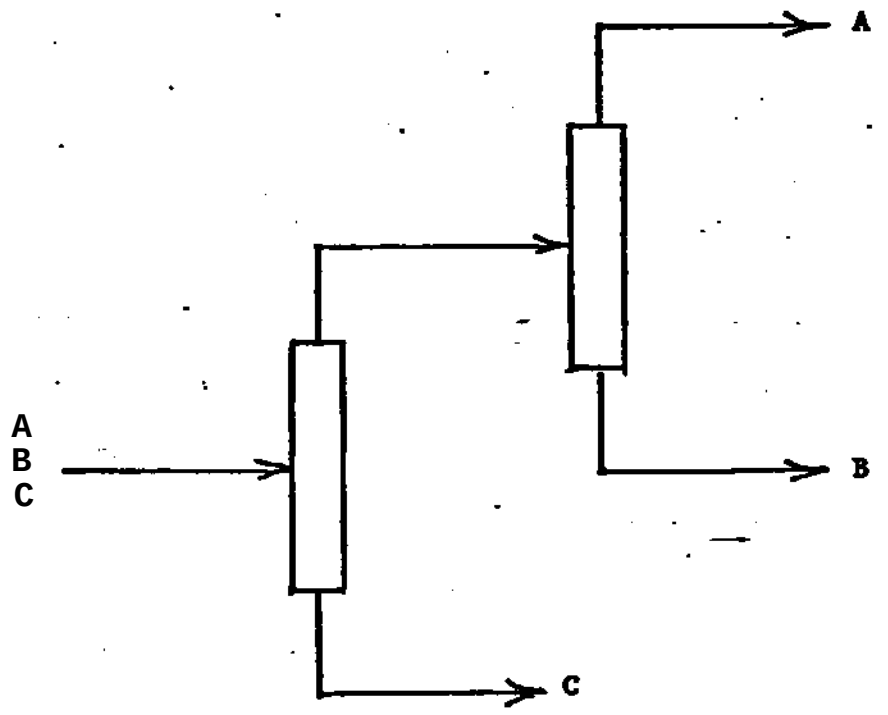

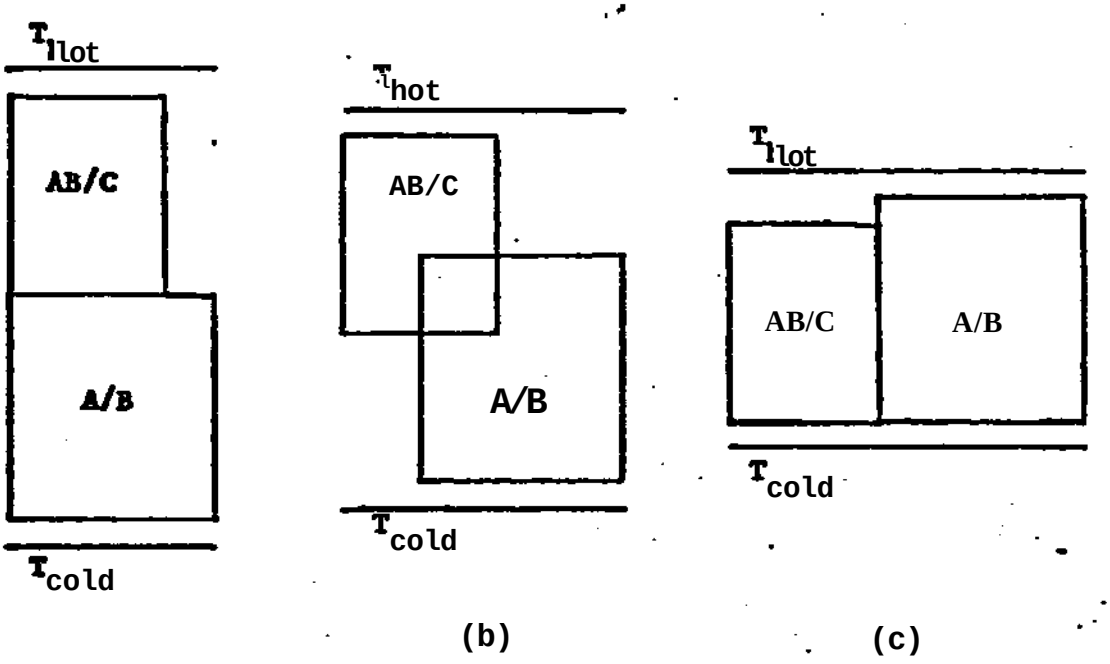

Figure. 11. Various Degrees of Heat Integrating

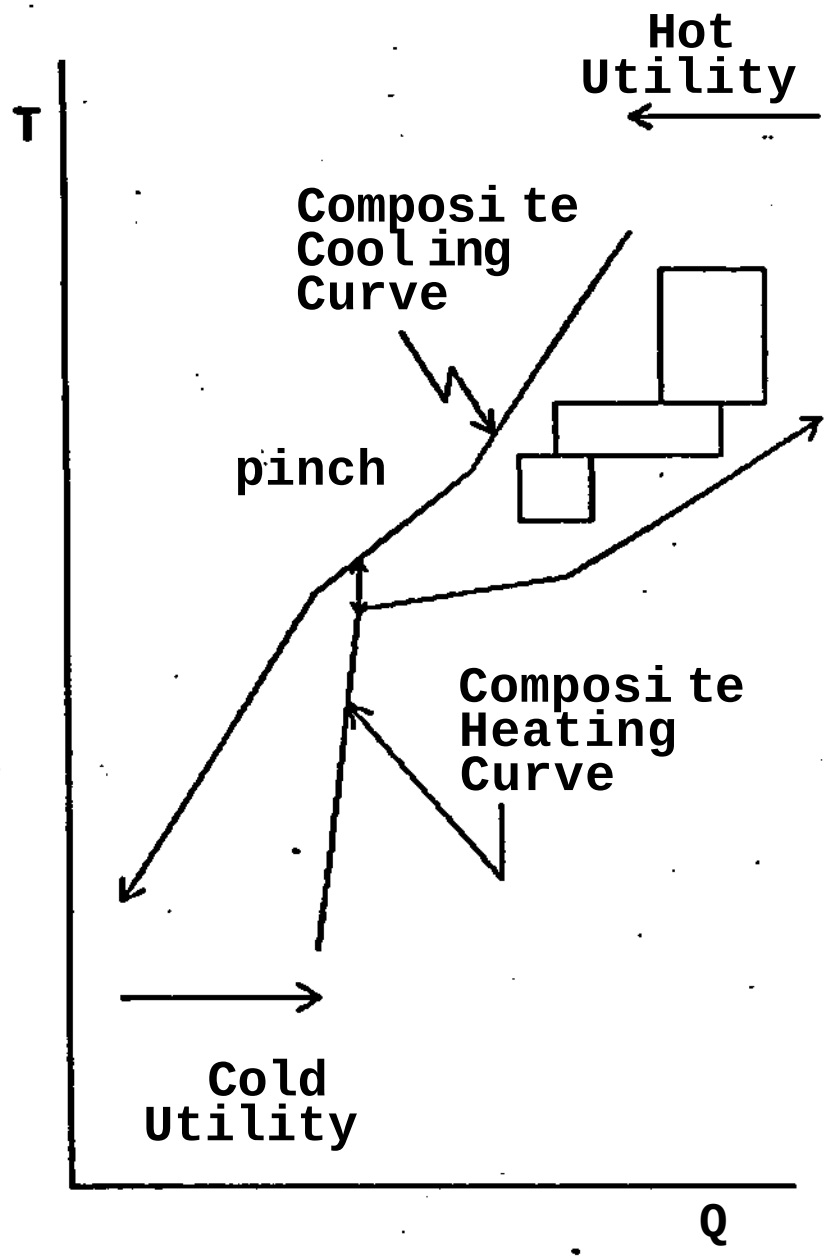

Figure 12. Stacking Separation Tasks Between Process Stream Sources and Sinks

Honsharp Splits

Figure 13 illustrates the importance of solving the problem of allowing the use of nonsharp splits in solving separation problems where the products are arbitrary mixtures and are not products with only nonoverlapping species as we have concentrated on so far. If we simply split a mixture of A,B and C partially in a single column and try to match those products by splitting into pure component products and mixing them, one can find the latter solution costs several times the cost of the former in terms of both utilities and capital.

Hohmann (1982) gave a very useful insight into developing column sequences to effect nonsharp splits for three component mixtures. He uses a triangular composition diagram, as illustrated in Figure 14. The lever rule (material balance constraints) require a single feed, two product column to have the top, feed and bottom compositions appear on a straight line on Figure 14. Points D (distillate), F (feed) and B (bottoms) within the diagram illustrate a column which is feasible from the material balance point of view.

Noting that the recovery of the most volatile component A must exceed that of the second most B which in turn exceeds that of C in the distillate, Hohmann observed that the hatched area bounded by the feed, pure A and pure C cannot be reached by a distillation process alone. If a desired product is in the hatched area, one will have to over separate and mix two or more products to obtain it.

Let's suppose our desired products are P_1, P_2 and P_3. We could propose the column (D,F,B) illustrated on Figure 14 as our first nonsharp split. We can then hope to split D into P_1 and P_2 as illustrated. By the

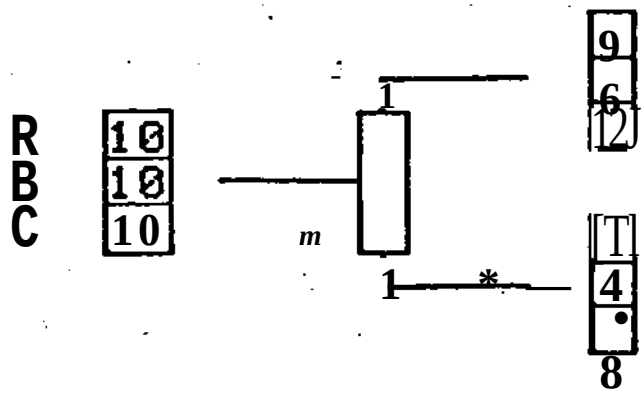

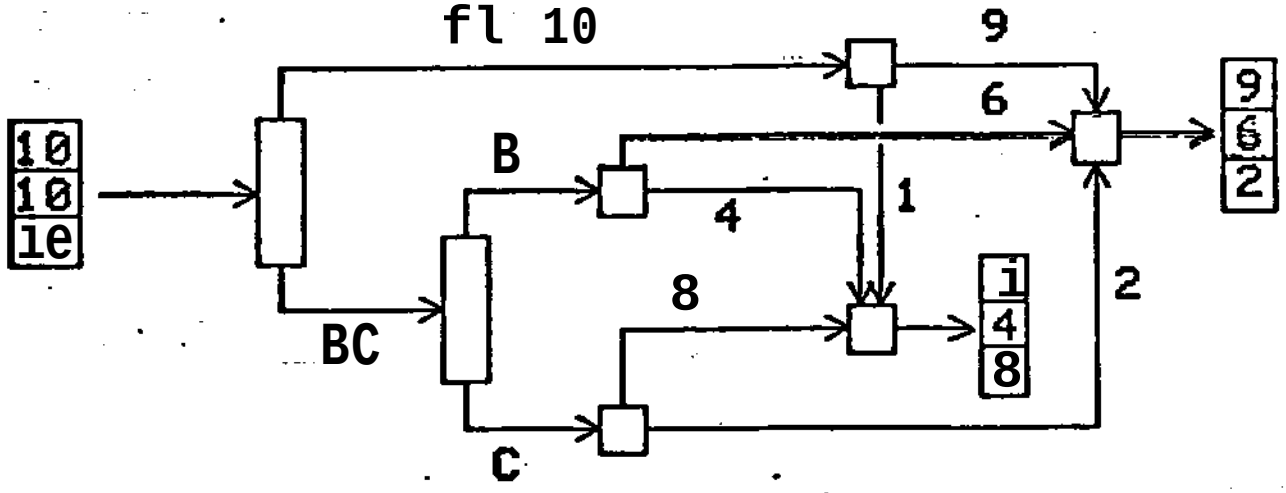

COST OPTION 2 > 2 TO 3 TIMES COST OPTION 1

Figure 13 Advantages of Nonahorp Splitting

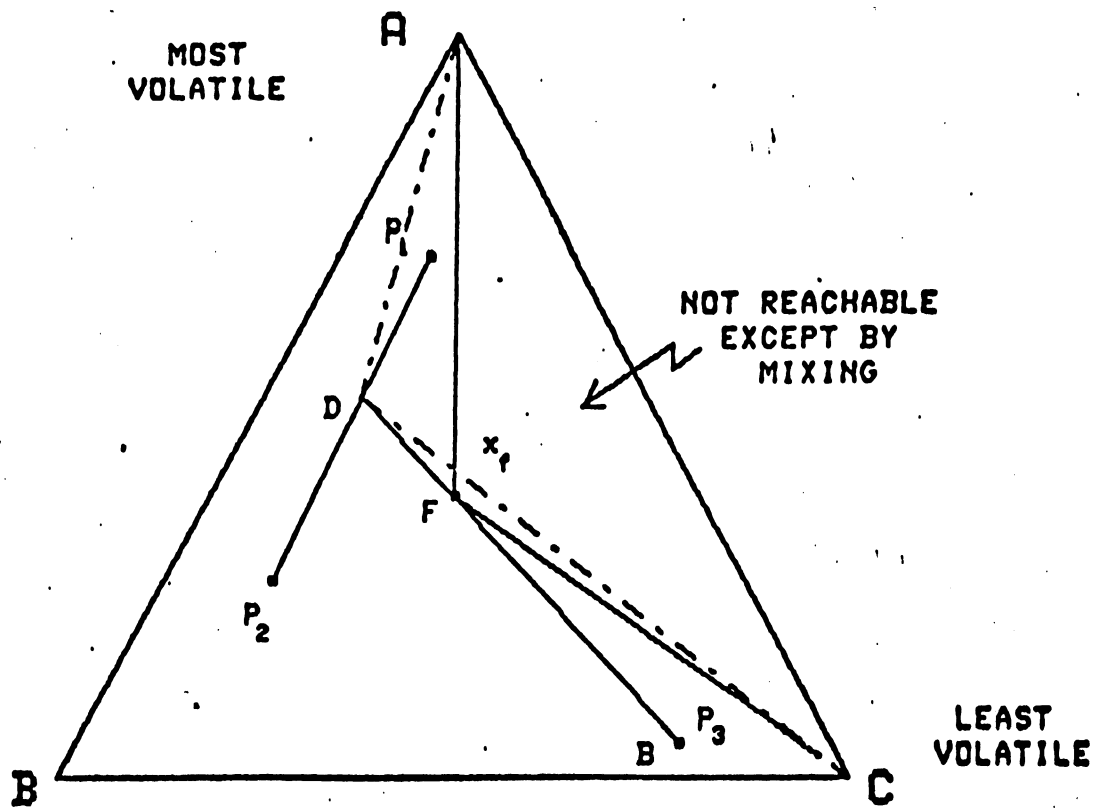

Figure 14. Use of Ternary Composition Diagram to Construct Nonsharp Split Column Sequences for 3 Component Feed Mixtures

above argument though, P_1 cannot be reached from a feed of D_____see the dashed lines outlining the unreachable region from D. However, we could first split F into P^1 and a bottoms product that can potentially be split into P^2 and P^3. Material balance constraints do not preclude this sequence*

A column cannot generally split a feed to match an arbitrarily selected distillate or bottoms composition for three components. Only two, not three, independent recoveries can be specified. So the above only shows really what cannot be done rather than what can.

Kofke, a senior in our department, examined Hdnsharp separations for the last year in an honors project under my direction. Independently taking advantage of the same idea that the recoveries in the top product of a column must be in the same sequence as the volatilities, he developed the construction in Figure 15 to discover if a product can be reached from a •mlticomponent feed in just two columns.

If the feed flow of component i, f^i and middle product flow desired for it, p^i are specified, then the product of the two recovers $a^i b^i$, as illustrated, is fixed, a^i and b^i are thus related as follows:

$$\log a_i = \log(p_i/f_i) - \log b_i .$$

In Figure 15, a plot for the recoveries of four components is given, with $\log a_i$ vs. $\log b_i$ plotted for each.

The constraints

$$a_A > a_B > a_C > a_D$$
$$b_A < b_B < b_C < b_D$$

result in the stepping off illustrated. The hatched segments on each line are feasible segments and mean that the above constraints can be satisfied in two columns and the product desired can possibly be reached in two columns*

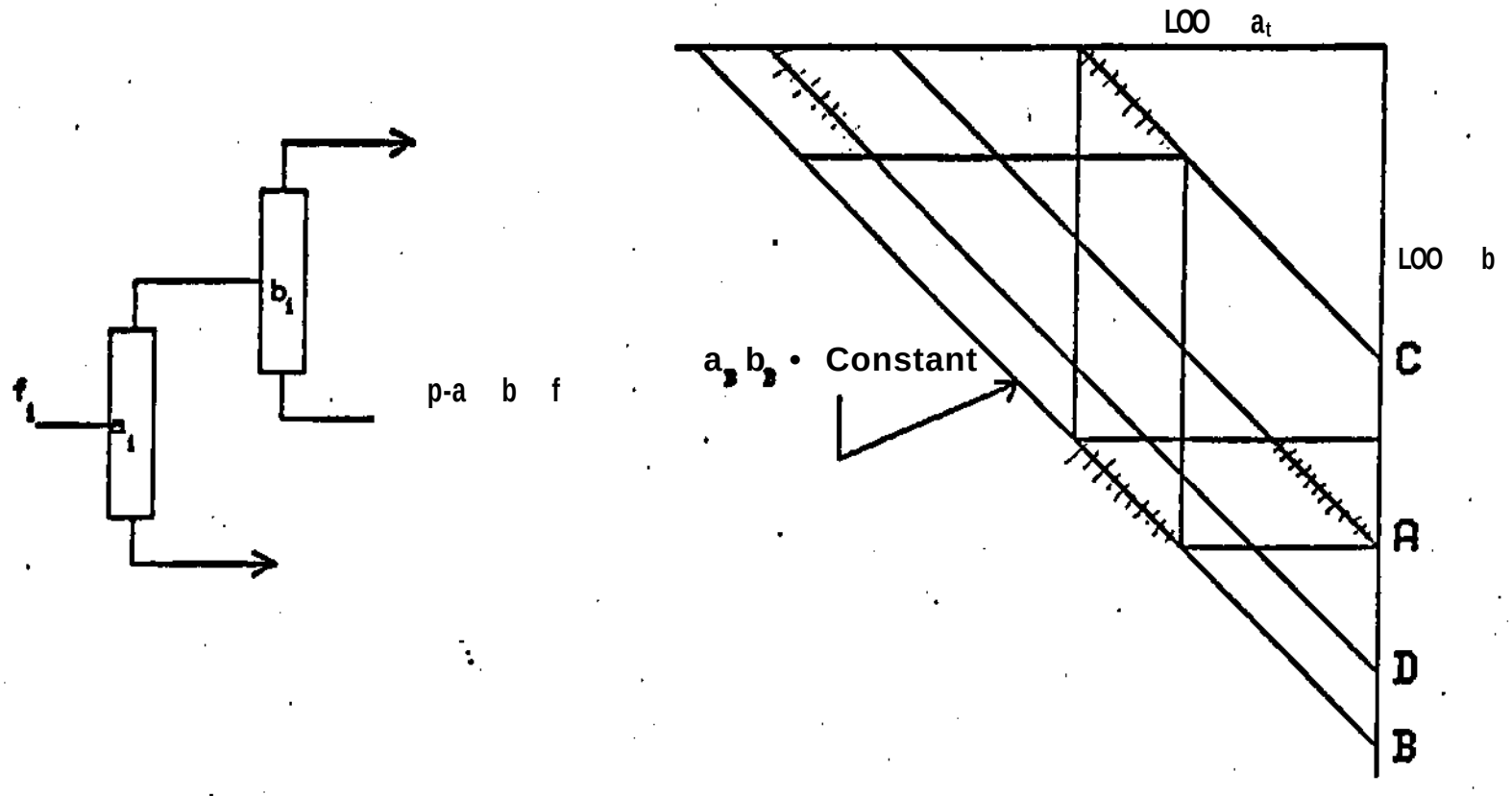

Figure IS. Reachable products In Two Columns

Kofke also noted that if one can bypass the column with part of the feed, then three recovery specifications can be met; thus the column performances required by Hohmann's analysis can in fact be met since Hohmann limits his arguments to three component feeds. Incidently it is not easy (but it can be done) to construct a tetrahedron diagram so Hohmann's ideas can be extended to four components. We never tried five component diagrams.

The General Problem

The "BALTAZAR[11] program by Mahalec and Motard (1977a,b) to synthesize complete flowsheets can be used to attack the general separations problem posed initially, where one has several feed mixtures and desires to create several products which are also mixtures. Their method is to develop a sequence of stream matching between source streams and product streams. The original sources and products are listed as such. The product listed first is then considered for matching against all possible sources. Each proposed match is classified into one of the following categories: 1) MATCH matches with the same compositions, 2) ADJUST matches where both source and product have the same components present, 3) PRODUCE and ADJUST matches where the source contains a subset of the species needed in the product, 4) SEPARATE matches where the source contains some or all of the species needed and 5) IRRELEVANT matches where no species are in common between the source and product.

The next match proposed involves the product stream listed first and a aatch from the sets in the order above; i.e. a match is selected from the MATCH set if it exists, otherwise from the ADJUST set, etc.

To select which match from within a set Mahalec and Motard propose categorizing a match on the basis of composition dissimilarity, adding up the absolute value of the differences in mole fractions of species between the sources and products. The match giving the lease value to this measure is selected.

Next the amount of the source to be used oust be determined, and Figure 16 illustrates how this decision is made. The source can supply all of species A by simply splitting it in half. Species B and C will be deficient, and this deficiency is defined as a required new intermediate product. Species D must be separated. We have matched species A here, the one whose concentration ratio in the product to the source is smallest to reduce to a minimum the amount of separation steps needed.

The new intermediate product produced in a match becomes the top listed product and is the one selected next for snatching. The matching process is continued until the product list is exhausted.

The final flowsheet is assembled from the march "structures" created in each step, and it is "cleaned up" by removing redundant portions, e.g. separators whose products feed into the same mixer.

The order one lists the original products affects the structure discovered. Thus Mahalec and Motard propose evolving the structure by repeatedly destroying portions of the resulting flowsheet appearing upstream of mixers. This "create", partially "destroy" cycle is continued until the structure created is unchanged from one cycle to the next.

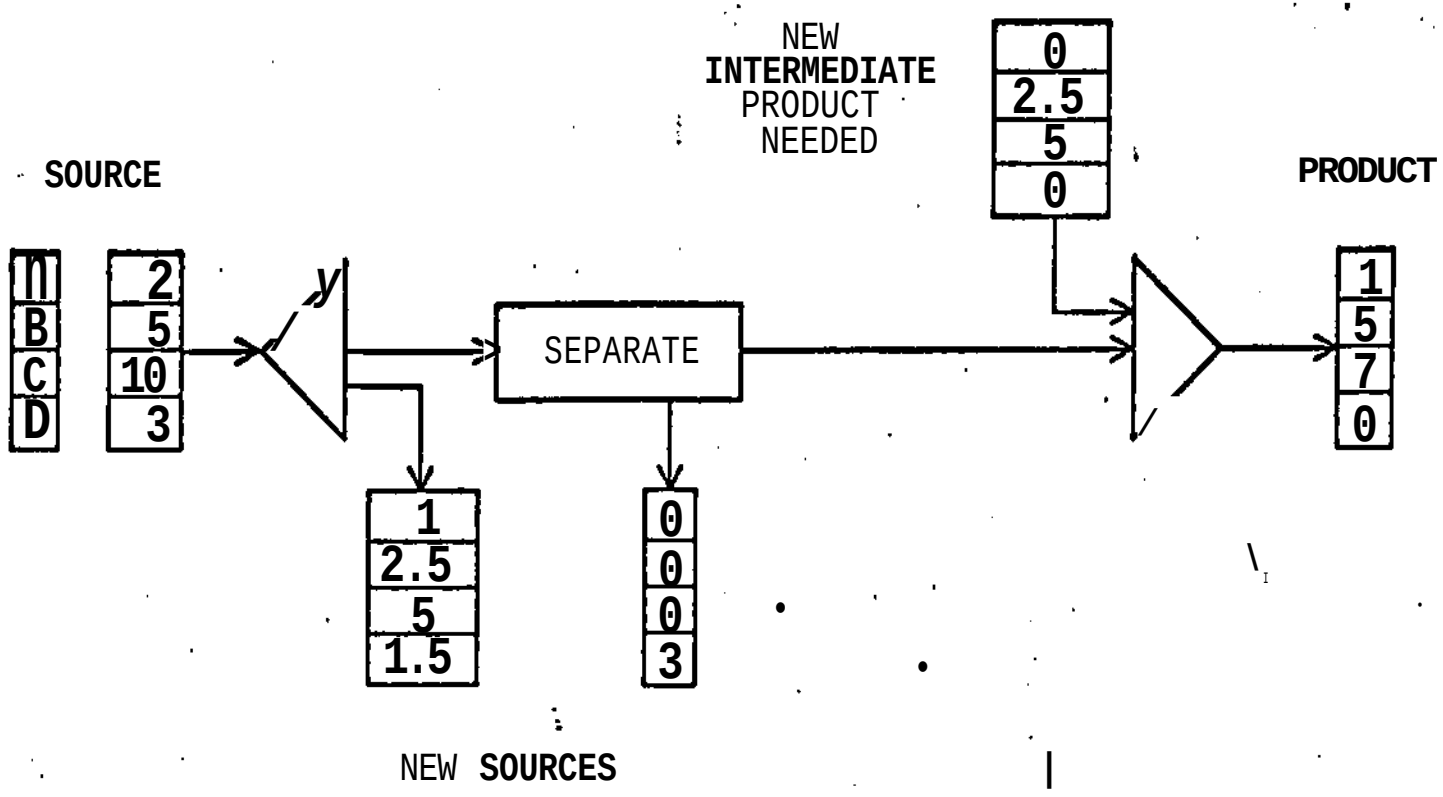

Figure 16 General Stream Matching Structure Created by Baltazor

The approach generates several different structures while seeking the better ones. To compare them, a heuristic is used to "cost" the separations tasks generated* The cost does not specifically consider distillation as the technology to be used, but it seems one could modify BALTAZAR to do so without too much effort.

The earlier AIDES program (Siirola and Rudd (1971), Powers (1971, 1972), Siirola, Powers and Rudd (1971), Rudd, Powers and Siirola (1973)) also had to approach the general separations problem. The matching of sources to products was done first using a set of heuristics to develop scoring functions and then a linear program to select the matches that maximized the scores. Scoring function values were developed on a specie by species basis — i.e. each specie in each product was matched against each source in which it existed. Using these scores, a linear program was set up and solved to decide the matches. Once decided, the AIDES program used heuristics to select the separation methods to be used and then the sequencing to be used.

3. IN CONCLUSION

We have examined the general separation problem where it is solved using only distillation technology. Recent* insights have provided serious design aids for constructing energy efficient solutions to this problem.

Work on nonsharp separations is beginning to look very interesting, **and** it is conjectured valuable design tools for it are just "around the corner".

Tailoring the general separations problem is still to be done where it is to be solved with the special features present in distillation.

An area not covered in this review is azeotropic distillation. Doherty and coworkers at the University of Massachusetts have been exploring this area in depth, and it will be reported on by Douglas (1983).

REFERENCES

Andrecovich, M.J. and A.W. Westcrberg, "A Simple Synthesis Method Based on Utility Bounding for Heat Integrated Distillation Sequences," accepted for publication, AIChE J. (1983).

Andrecovich, M.J-, "Synthesis of Heat Integrated Distillation Sequences," Ph.D. Thesis, Carnegie-Mellon University, Pittsburgh, PA 15213 (1983).

Douglas, J.M., Presentation on Synthesis, 25th CONICET Anniv. International Conf• on New Develop. Toward Technologies with Low Energy Requirements, INTEC, Santa Fe, Argentina, Aug. (1983).

Dunford, H.A. and B. Linnhoff, "Energy Savings by Appropriate Integration of Distillation Columns into Overall Processes," Symposium, Leeds, July 9-10 (1982).

Faith, D.C., III and M. Morari, "Synthesis of Distillation Schemes with Heat Integration," Proc. 12th Symposium on Computer Applications in Chemical Engineering, p. 501, Montreux, Switzerland (1979).

Gomez, M.A. and J.D. Seader, "Separator Sequence Synthesis by a Predictor Based Ordered Search," AIChE J. £2, 970 (1976).

Harbert, V.D., "Which Tower Goes Where?", Petroleum Refiner. 36.* No. 3, pp. 169-174, March 1957.

Heaven, D.L., "Optimum Sequencing of Distillation Columns in Multicomponent Fractionation," M.S. Thesis, Univ. of Calif., Berkeley (1969).

Hendry, J.E. and R.R. Hughes, "Generating Separation Process Flowsheets," Chera. Eng. Prog., 68, 69 (1972).

Hohmann, E.C. and M.T. Sander, "A New Approach to the Synthesis of Multicomponent Separation Schemes," Chem. Eng. Comrnun., r7> 273 (1982).

Lockhart, F.J., "Multi-column Distillation of Natural Gasoline," Petrol Refiner., 2JS, 104 (1947).

Mahalec, V. and R.L. Motard, "Procedures for the Initial Design of Chemical Processing Systems," Computer and Chem. Eng., 1^, 57 (1977a).

Mahalec, V. and R.L. Motard, "Evolutionary Search for an Optimal Limiting Process Flowsheet," Computer and Chera. Eng., 1^, 149 (1977b).

Naka, Y., M. Terashita and T. Takamatsu, "A Thermodynamic Approach to Multicoraponent Distillation System Synthesis," AIChE J., 2£, 812 (1982).

Nath, R. and R.L. Motard, "Evolutionary Synthesis of Separation Processes," AIChE J., 22, 321 (1981).

Nishida, N.» G. Stephanapoulos and A.W. Westerberg, "A Review of Process Synthesis," AIChE J., 22, 321 (1981).

Petlyuk, F.B., V.M. Flatonov and D.M. Slavinskii, "Thermodynamically Optimal Method for Separating Multicomponent Mixtures," Intern. Chem. Eng., 5, 555 (1965).

Powers, G.J., "Recognizing Patterns in the Synthesis of Chemical Processing Systems," Ph.D. Thesis, Univ. Wisc., Madison (1971).

Powers, G.J., "Heuristic Synthesis in Process Development," Chem. Eng. Progr., 68, 88 (1972).

Rathore, R.N.S., K.A. Van Wormer and G.J. Powers, "Synthesis Strategies for Multicomponent Separation Systems with Energy Integration," AIChE J., 20, 491 (1974a).

Rathore, R.N.S., K.A. Van Wormer and G.J. Powers, "Synthesis of Distillation Systems with Energy Integration," AIChE J., 20, 940 (1974b).

Rodrigo, B.F.R. and J.D. Seader, "Synthesis of Separation Sequences by Ordered Branch Search," AIChE J., 21, 885 (1975).

Rudd, D.F., G.J. Powers and J.J. Siirola, Process Synthesis, Prentice Hall, NJ (1973).

Rudd, D.F. and C.C. Watson, Strategy of Process Engineering, Wiley, New York (1968).

Sargent, R.W.H. and K. Gaminibandara, "Optimum Design of Plate Distillation Columns," Optimization in Action, ed., L.C.W. Dixon, Academic Press (1976).

Seader, J.D. and A.W. Westerberg, "A Combined Heuristic and Evolutionary Strategy for Synthesis of Simple Separation Sequences," AIChE J., 23, 951 (1977).

Siirola, J.J., G.J. Powers and D.F. Rudd, "Synthesis of System Designs, III: Toward a Process Concept Generator," AIChE J., 17, 677 (1971).

Siirola, J.J. and D.F. Rudd, "Computer-Aided Synthesis of Chemical Process Designs," Ind. Eng. Chem. Fundamentals, 10, 353 (1971).

Sophos, A., G. Stephanopoulos and M. Morari, "Synthesis of Optimum Distillation Sequences with Heat Integration Schemes," 71st Annual AIChE Meeting, Miami, FL (Nov. 12-16, 1978).

Sophos, A., G. Stephanopoulos and B. Linnhoff, "Synthesis of Heat Integrated Distillation Sequences Using a Weak Decomposition of the Problem," paper submitted to AIChE J. (1981).

Stupin, W.J. and F.J. Lockhart, "Thermally Coupled Distillation — A Case History," Chem. Eng. Prog., 68(10), 71 (1972).

Tedder, D.W. and D.F. Rudd, "Parametric Studies in Industrial Distillation, Part I: Design Comparisons," AIChE J., 24, 303 (1978a).

Tedder, D.W. and D.F. Rudd, "Parametric Studies in Industrial Distillation, Part II. Heuristic Optimization,[11] AIChE J., 24, 316 (1978b).

Thompson, R.W* and C.J. King, "Systematic Synthesis of Separation Schemes/' AIChE J., 1JJ, 941 (1972).

Westerberg, A.W. and G. Stephanopoulos, "Studies in Process Synthesis — I. Branch and Bound Strategy with List Techniques for the Synthesis of Separation Schemes," Chem. Eng. Sci., 30, 963 (1975).