Carnegie Mellon University
Research Showcase @ CMU

Department of Electrical and Computer Engineering

Carnegie Institute of Technology

1980

Electric energy brokerages : some concepts and models

Talukdar
Carnegie Mellon University

Vaidyanathan Udayabhanu

Thomas E. Morton

M. Granger. Morgan

Follow this and additional works at: http://repository.cmu.edu/ece

Recommended Citation
.

This Technical Report is brought to you for free and open access by the Carnegie Institute of Technology at Research Showcase @ CMU. It has been accepted for inclusion in Department of Electrical and Computer Engineering by an authorized administrator of Research Showcase @ CMU. For more information, please contact research-showcase@andrew.cmu.edu.

NOTICE WARNING CONCERNING COPYRIGHT RESTRICTIONS:
The copyright law of the United States (title 17, U.S. Code) governs the making of photocopies or other reproductions of copyrighted material. Any copying of this document without permission of its author may be prohibited by law.

ELECTRIC ENERGY BROKERAGES - SOME CONCEPTS AND MODELS

V ^ ^ by 6<.

S.N. Talukdar, V. Udayabhanu, T.E. Morton, and M.6. Morgan

DRC-18-26-80

August 1980

SIINM \KY

Emerging energy and control technologies are making possible a variety of new configurations and operating modes for electric energy networks. The range of possibilities can best be described by thinking of the network as an energy brokerage instead of a delivery system. Customers with their own generation or storage facilities could elect to sell energy to the network at certain times. The prices at which the network would buy and sell energy could be determined in several ways: by the utility owning the network, by an outside agency or even by auction. Besides the indirect mechanism of price, a number of direct mechanisms for controlling the flow of energy are feasible including the interruption of supply to customers at certain times.

Some of these possibilities are radical, especially when viewed from the perspective of present operating practices. Significant institutional and regulatory difficulties would have to be overcome before they could be implemented. However, it is possible that their benefits would be worth the effort. Therefore, planners must take a global view. The system which best uses the new hardware and control technologies may be different from the system that would result, were we to allow it to evolve in undirected ways along low difficulty paths.

This paper lays some of the conceptual groundwork for global assessments of alternatives and their impacts, and describes a preliminary set of models for exploring a few of the impacts.

Ufc|VERSITY LIBRARIES
CARNEGIE-MELLON UNIVERSITY
"i PITTSBURGH. PENNSYLVANIA 15211.

INTRODUCTION

One of the basic tenets underlying the development and regulation of electric utilities in the U.S. is that customers' energy demands must be supplied in full, as and when these demands occur. Existing systems use large, remotely located (central) generating plants for the bulk of the energy produced to meet these demands. Electric energy storage facilities are minimal. Consequently, generation must closely track demand. Prices charged to customers are pre-set and do not accurately reflect costs nor do they encourage efficient consumption.

It is clear that this mode of operation cannot continue indefinitely. An all-too-familiar set of scarcities and socio-economic pressures is making it difficult to build new central generating plants and even to find economically and environmentally acceptable fuels for existing plants.

Seveal emerging energy and communication technologies are relevant in the search for new operating modes. The former include storage*, generation**, and cogeneration*** technologies for units small enough to be placed in individual homes; large enough for central deployment and everything in between [1],[2]. Within the next two decades large numbers of such devices will be deployed in power system networks. Some will

---

* batteries, flywheels and thermal stores, for instance.

** windmills, small hydro generators, and solar generators, for instance.

***the term cogeneration refers to the simultaneous production and use of electricity and heat. Diesel generators, gas turbines, as well as processes such as petroleum refining and paper making have cogeneration potential.

belong to utilities, others to customers.

Emerging communication technologies will make it possible for large numbers of dispersed storage, generation, and cogeneration (DSGC) devices to be centrally controlled and for broad band data channels to be established between utilities and their customers. The operational alternatives made feasible by this environment include:

Spot Pricing: The utility can post prices at which it will buy and sell energy. These could follow a pre-assigned schedule or vary dynamically to reflect market conditions. They could also vary from customer to customer. At the bulk power level, utilities have been buying from, and selling energy to, one another for some time. The extension of this brokerage idea to the customer level has been suggested by Talukdar, Morgan and Morton [1], [3], as well as Schweppe, et al, [4], [5], [6].

Curtailments and Interruptions: The utility may interrupt supply to selected loads during certain time periods. (This is by no means a new idea. 95% of the customers in Holland, for instance, allow their electric space and water heating loads to be interrupted in order to reduce the demand peaks seen by the network [7]. However, the newer communication technologies will make it possible to implement more sophisticated curtailment schemes than have hitherto been feasible.)

Continuous Load Control.: The pi-vcr demands of curtain loads can be continuously controlled, within j units, without adversely affecting their performance [4]. (Consider, for Instance, an electrically heated home whose temperature is to be maintained within some range specified by its inhabitants. As long as the temperature is strictly inside this range, the heater's power input may be varied between 0 and its full rating.) Customers may even relinquish some measure of control of other types of loads in exchange for favorable rates or other perquisites.

The impacts and performance implications of these operating alternatives are profound and include:

Security. (The term refers to a power system's ability to weather disturbances such as lightning strokes and equipment outages without massive interruptions of supply to customers.) So far, security has been achieved by maintaining reserves of generation and delivery capacity, sufficient to cover most random outages. However, the adjustment of load demand can also be used to enhance security.

Conservation. Customer power demand profiles can be changed by direct methods such as "curtailments" and "continuous control" and by indirect methods such as "spot pricing". Thereby, one can reduce energy consumption or utility operating costs or the consumption of selected fuels or the peak demand seen by the utility.

Capital Expenditure and Equipment Penetrations. It is easy to see that the deployment of SDGC equipment reduces the need for central generating and storage capacity. Thus,expenditures for DSGC equipment can be traded for expenditures for central equipment. In fact, a utility could induce its customers to make tho capital expenditures for DSCC equipment

by guaranteeing the minimum price levels at which it will buy energy from them over some horizon.

Reliability. The availability of local energy supplies from either storage or generation devices reduces the impact of failures upstream in the electric network.

Quality of Service. The issue here is to maintain the fundamental amplitude, fundamental frequency and total harmonic content of the voltage at customers' terminals within PUC specified limits. It is to be expected that significant penetration of DSGC devices will complicate the voltage control problem. Of special concern are the solid state interfaces that will be required between the 60 Hz power network and DC devices such as fuel cells and battery chargers for electric cars or variable frequency devices such as windmills [8].

Social Impacts. Morgan and Talukdar [1] have identified a number of potential negative social impacts including increased system vulnerability to disruption, privacy invasions, unauthorized load manipulations, and bill cheating. The last of these may be the most difficult to deal with. At present, customers can, at most, reduce their bills to zero. However, when they can sell energy to the utility, the prospects for cheating become much greater.

MODKI.S

The profusion of alternatives and implications outlined in the previous section presents the utility and regulatory planner with a complicated design problem. To tackle it the planner needs, at the very least, a set of models with which to answer "what if?[11] questions, determine sensitivities and probe the feasible regions in decision and performance space. In the subsequent material we will describe a subset of such models that apply to the distribution part of a power network. This part is used for local deliveries of energy. It operates at comparatively low voltages, 34KV and under, and is predominantly radial in nature (i.e., no more than one path connects each pair of nodes). Distribution networks constitute the marketplace in which customers will buy and sell energy from their utilities. This is why we focus our attention on them.

Our principal concerns will be with energy flows and their impacts. We will develop a set of generic, energy network models. These models apply to any radial energy network, not just to electric networks. They do not preserve the separate identities of voltages and currents. As a result, the models cannot be used to investigate electric "quality-of-service" issues. To include these issues would endanger the computational viability of the models.

The generic models will be built around a core consisting of a Generalized Transportation Algorithm. This type of algorithm is especially well suited to handling energy flows in radial networks and has been translated into extremely efficient codes, e.g. [9].

Tn the next section we wili outline, the function:; of a Transportation Algorithm. Then we will describe how to model distribution network components in transportation terms.

Generalized Transportation Network Algorithms

A generalized transportation algorithm seeks to distribute a commodity from a group of supply centers called sources, to a group of demand centers called destinations, via intermediate transhipment points, so as to minimize total distribution costs. A necessary condition is that the distribution cost between any two points be linear in the quantity distributed; this can be generalized to piecewise linear convex costs. The law of conservation forms the basic constraint set; at each point, the total incoming quantity plus the supply at the point must equal the total outgoing quantity plus the demand at that point. The problem may conveniently be represented in terms of a network structure; the equivalent network problem is called the shortest-route problem.

We now turn to a formal statement of the problem. Consider a distribution network wherein N represents the set of all nodes, and F the set of all arcs. The net supply/demand at node n is indicated by a_n, where $a_n > 0$ for supply and $a_n < 0$ for demand. Each arc's characteristics are stored in two descriptors, a triplet and a quadruplet, defined as follows:

$i_j = (m_£, n_f, f)$

$^{j}f * (^{r}f'^{c}f'^{X}min, f^{fX}inax, f)$

where

f is the arc number

m_f is the head node of the arc

n_f is the tail node of the arc

r_f is a multiplier giving the outflow from the tail for each unit of inflow to the head

c_f is the cost **per** unit of flow into the head; this cost is allowed to **be** negative

$x_{min,f}$, $x_{max,f}$ are the lower and **upper** bounds on x_f

x_f is the inflow to the head.

Let I = (i f l f i: F K bo Che sot of alL arc triplet: descriptors

$H(n) = \{f|(n,m_f,f) \in I\}$, bo the set of aJ1 arcs with head n

$G(n) = \{f|(m_f,n,f) \in I\}$, be the set of all arcs with tail n

If C is the total distribution cost, the objective is to

$$\text{Minimize } C = \sum_{f \in F} c_f x_f$$

subject to

$$\sum_{f \in H(n)} x_f - \sum_{f \in G(n)} r_f x_f = a_n, \quad n \in N$$

$$x_{min,f} \le x_f \le x_{max,f} \quad f \in F$$

Distribution Systems Components and Phenomena

The principal components of existing distribution systems are:

- substations (points of interconnection between transmission and distribution systems which, for our purposes, can be regarded as energy sources)

- delivery elements such is lines, transformer.*; and swLtches
- loads (consumers of electrical energy with profiles like the one shown in Figure 1)
- thermal storage (largely heat retained in houses and hot water heaters)

The new technologies will introduce dispersed electrical storage, generation and cogeneration* so that future distribution networks will have the form shown in Figure 2.

Consider a finite network of this type and a time period, T, over which its behavior is to be modeled. If the time period is broken into K intervals such that the power flows in each interval can be approximated by constants (as has been done for the load in Figure 1), then the power network can be represented by a transportation network that consists of K topologically identical subnetworks, one for each time interval, that would be independent except for the effects of storage and a phenomenon called "rebound[11] which will be explained shortly.

Storage devices allow energy delivered in one time interval to be used in another. As such, they provide paths between time intervals. Naturally, the flows along these paths are accompanied by losses. Three types of losses are recognized here: charging losses, discharging losses and quiescent (seepage) losses. In addition, a device's activity may be periodic with respect to T, the time period of interest. If not, the device's initial and final energy contents must be known.

Rebound is a load's reaction to energy curtailments. If the energy requirements of a load are not fully supplied during an interval, then it reacts by increasing its demands during subsequent intervals [101, U U . The increases are eaJled ''rebounds.[11] Constantopoitlos and Talukdar [12]

havo shown that a simple, I hu'.'ir, one-step modt.vl captures all the? essential features of rebound. This model has the form:

$$V l " {}^{d}k_{+}l {}^{+ S}lc <^{D}k - {}^{P}k)$$

where $d_{K.}$ is original power demand in interval k, $D_{K.}$ is the inflated demand resulting from curtailments in prior intervals, P, <^ D' is the power actually supplied in interval k and 3^{1} is a constant depending on the load's characteristics and the length of the interval, with $0 < g' < 1$. Rebound phenomena can be expressed in transportation network terms by arcs that allow energy flows that go "backwards in time," that is, by arcs that connect interval k to interval k-1.

Of course, rebound models would not be necessary if curtailments were not used. The curtailments themselves can be modelled by fictitious generators or stores. These fictitious devices supply part of the load demands in the transportation network. This part is not supplied in the actual electric network, and hence, represents a curtailment.

APPLICATIONS AND AN EXAMPLE

The generic models described in the last section may be used to analyze different kinds of power distribution problems, using a generalized transportation network code.

Minimizing Operating Cost

The objective of minimizing operating costs is easily accommodated [13]. One need merely define the objective function as:

$$\underset{x_f}{\text{Minimize}}\ C = \sum_{f \in F} c_f\, x_f\ .$$

where the c's are the operating costs of the associated devices.

Minimizing Substation Capacity Requirements

This objective is met by utilizing storage device capacity to the fullest extent to supply peak loads. The problem may be solved iteratively by starting out with a sufficiently large substation capacity and reducing it on successive iterations until the problem is on the verge of turning infeasible. Clearly, the average demand over the horizon is a lower bound on the substation capacity requirement.

Multiobjective Problems

Many of the operating objectives of power distribution systems are in conflict with one another; such situations demand tradeoffs. A number of methods can be used to generate the set of the best possible tradeoffs (Pareto Efficient Tradeoffs) e.g., [14]. Some of these can be incorporated into our models. For example, suppose there are two objectives of interest:

- Minimizing the total cost C of operating the network over period T, and

- Minimizing the total nominal energy curtailment S, where

$$S = \sum_{k \in K} \sum_{f \in M} r_f \; x_f \; h_f$$

and

M = the set of all arcs from the fictitious sources used to model curtailments

Points on the Pareto Efficient Surface in these two objectives can be determined by solving the single objective problem:

$$\underset{x_f, f \in F}{\text{Minimize}} \quad (C + \lambda_i \, S) \tag{1}$$

for various values of λ_i, provided the Pareto Surface is convex. Otherwise, one can use an "additionally constrained formulation":

$$\underset{x_f, f \in F}{\text{Minimize}} \quad C \tag{2}$$

subject to: $S = \alpha_i$

where α_i takes on various values. Formulation (1) can be directly incorporated into the transportation model by setting the costs associated with the curtailment arcs ($f \in M$) to be equal to λ_i. Formulation (2) requires iteration. Procedures for developing the best tradeoff surfaces between other combinations of objectives require further investigation.

Switching Studies

The existence of switches in a network gives rise to another kind of problem: deciding which switches are to be kept open, and which closed, in each period. The need for switching may arise due to any of the following factors:

- Widely fluctuating load patterns over time
- The occurence of faults in the network
- The existence of dispersed generators and storage devices that produce local excesses of energy at certain times.

We assume that all switches are specified in groups, with constraints on the number of switches that may be closed in each group at any given point in time. (If all switches are permitted to remain closed at all times, then this problem simply reduces to the standard transportation network problem described earlier,) The objective is to minimize total operating costs subject to the additional switching constraints.

Switches may be conveniently modeled by associating them with arcs of the network. We assign a 0-1 variable 6_f to each arc. Closing a switch permits flow along the corresponding arc ($\alpha_f = 1$), while opening a switch prohibits flow along the arc ($6_f = 0$). Opening a switch may be accomplished in any of the following ways:

- Dropping the corresponding arc f from the network
- Assigning a very high unit cost of flow c_f to the corresponding arc
- Setting the upper and lower bounds on flow through the corresponding arc equal to'zero;

$$x_{max,f} = x_{min,f} = 0$$

Note that $\alpha_f = 1$ for all arcs not associated with switches.

Let in be the total number of groups (of switches)

Q_s be the set of all arcs corresponding to switches in group s

J_s be the total number of switches ju group s

I_s be the number of switches required to bo open in group s.

The switching problem can -formally 1K» slaLrd a:; follows:

$$\text{Minimize} \quad \sum_{f \in F} c_f x_f \delta_f$$

subject to

$$\sum_{f \in H(n)} x_f \delta_f - \sum_{f \in C(n)} x_f \delta_f = V \quad n \in N$$

$$\sum_{f \in Q_s} \delta_f = J_s - I_s, \qquad s = 1, \ldots, m$$

$$\delta_f = 0 \text{ or } 1, \qquad f \in F$$

This problem can be solved using traditional branch-and-bound methods. The procedure involves repeatedly solving the network at each node of the branching tree; it quickly becomes computationally expensive, virtually prohibiting the solution of large-scale problems. Therefore, a heuristic approach is called for, A useful method is the following:

Begin by permitting all switches to be closed, and obtain the optimal solution to the relaxed problem. Then open one switch at a time and resolve the problem, repeating the procedure until the required number of switches are opened. The number of iterations required does not exceed the number of switches that must be opened. Picking the "best" switch to be opened at each iteration may be based on any of the following criteria developed from the optimal solution in the immediately preceding iteration:

- Smallest flow through the switch
- Largest marginal cost of flow
- Largest total cost of i low.

Spot Pricing: Buying and Selling Operations

Buying and selling operations by customers can be accommodated because the costs associated with transportation network arcs can be negative (provided the buying prices are convex and the selling prices are concave in power flow). First the pricing curves are approximated by piece-wise linear curves. Then an arc is assigned to each linear segment. The "buying[11] arcs allow flows to the customer and have positive costs equal to the piece-wise linear segment slopes. The "selling" arcs allow flows away from the customer and have negative costs.

An Example

Consider the system shown in Figure 4. The best possible trade-offs (Pareto efficient tradeoffs) between operating cost, C, and curtailment, S, were calculated uslut; the models and are shown in Figure 5. Each point on this curve corresponds to an entire operating schedule. One such schedule is shown in Figure 6.

The observant reader may detect an apparent imbalance between the amounts of energy curtailed and supplied from the substation and generator. This results from the definition of curtailment used here, i.e., the differences between the load demand and the supply. Because of rebound effects, a curtailment in period k produces an inflated demand in period k+1. If this inflated demand is not completely met, the difference is interpreted as the curtailment in period k+1.

If rebound factors are significant (6_k = 1 or P_k just less than 1), and the demand peak lasts for some time, it may not be possible to use curtailment to reduce the peak. This is because a curtailment in one period just shows up as an inflated demand in another, perhaps producing

an even greater peak. Tn such iLuations curtailment can be *used* to "shave the shoulders[11], i.e., to reduce the duration of the peak. This is what happens in the example considered here.

CONCLUDING REMARKS

Much of the ongoing work in the area of planning and energy management methodologies is focused on specific new technologies and strategies. Most researchers are concerned with the problems of incrementally introducing these specific new technologies into existing systems. This focus is correct. However, a small portion of the total research effort should be devoted to a series of global assessments. In the long run the system which makes the best use of the full set of advanced energy and management technologies may not be the same system that would result by allowing present systems to evolve in natural, undirected ways [1].

This paper has provided a preliminary description of the range of available design alternatives and their impacts. The paper also describes a set of models that can be used to evaluate a large class of these impacts. As such, the paper lays the groundwork for the development of methodologies that take a global view. Among the tasks calling for further work are:

- the development of a framework in which to systematically describe the full range of design alternatives and the expansion of the model set to cover these alternatives and their impacts

- the development of planning methodologies that can consider at least significant subsets of the feasible alternatives and rationally deal with their conflicting impacts (i.e., use multi-objective optimization methods).

ACKN()WL!•!)(.'KMKNT

The work reported here was supported in part by the Division of Electric Energy Systems, Department of Energy under contract number EC-77-S-02-4538.

REFER!-' CMS

[1] M.G. Morgan and S.N. Talukdar, "Electric Load Management: Some Technical, Economic, Regulatory and Social Issues,[11] invited paper, IEEE Proceedings, February 1979, pp. 241-312.

[2] K.A. Bahrami, R.W. Caldwell, "Electric Utility Systems Application of Dispersed Storage and Generation,[11] paper //A79494-6, presented at the IEEE-PES Summer Conference, July 1979.

[3] S.N. Talukdar and T.E. Morton, "The Optimal Operation of Power Distribution Networks with Dispersed Storage, Dispersed Generation and Curtailable Loads," Proceedings of the Second Lawrence Symposium on Systems and Decision Sciences, Berkeley, CA, October 1978.

[4] F.C. Schweppe, R. Tabors, J.L. Kirtley, Jr., A. Cox, H. Outred, F.M. Pickel, to appear in IEEE-PES Trans, on PAS.

[5] F.C. Schweppe, "Power Systems f2000f: Hierarchial Control Strategies,[11] IEEE Spectrum, July 1978.

[6] "New Electric Utility Management and Control Systems," Proceedings of Conference held at Foxborough, MA, May 30-June 1, 1979.

[7] T. Laaspere, "On European Approaches to Managing the Electric Load," Rep. No. DVE-2, Thayer School of Engineering, Dartmouth College, Hanover, NH, 03750.

[8] S.N. Talukdar and I.J. Pitel, "A Methodology for Controlling Harmonics in Networks with Dispersed Power Converters," presented at the IEEE-PES Summer Meeting, July 1979.

[9] "NETG User's Guide," Analysis, Research and Computation, Austin, TX.

[10] "California Load Management Research 1977," California Energy Resources Conservation and Development Commission, Sacramento, CA, October 1977.

[11] B.F. Hastings, "Ten Years of Operating Experience with a Remote Controlled Water Heater Load Management System at Detroit Edison," to appear in IEEE-PES Trans, on PAS.

[12] P. Constantopoulos, S.N. Talukdar, "The Effects of Rebound on Load Management - A Multiobjective Perspective," Proc. of the Tenth Pittsburgh Modeling and Simulation Conference, April 1979.

[13] S.N. Talukdar, D. Markus, P. Constantopoulos, T.E. Morton, "A Model for Load and Supply Management in Distribution Systems," presented at the IEEE-PES Summer Meeting, 1979.

[14] S.N. Talukdar, M. Lightner, R.L. Koo, "MultiobjccLLve Optimization Procedures lor Tower System Problems,[11] presented at the Summer Power Conference, Vancouver, JILI* 1979 (Paper //A79 473-9).

FIGURE CAPTIONS

1. Typical daily load curve and a discrete approximation to it.

2. A simplified schematic of the way in which storage and generation devices will be deployed in future distribution networks.

3. A simple electrical network and its transportation model.

4. A study system with the following parameters:
   (1) Substation; capacity: 4MW; cost: 5 mills/kWh (0-1500 kw), 10 mills/kWh (1500-2500 kW), 35 mills/kWh (2500 kW).
   (2) Alternative Generator; type: windmill; capacity: 0.1 MW, cycle: intermittent; cost: 1 mill/kWh.
   (3) Storage; type: battery; capacity: 2 MWh; efficiency 85% charging and discharging, 99% quiescent; cost: 1 mill/kWh.
   (4) Aggregated Load; type: 2000 residential customers; peak load: 3.68 MW; energy demand: 60.8 MWh/day.

5. Pareto efficient tradeoffs for the example system.

6. The operating schedule for one of the Pareto efficient points (S = 2.192 MWh/day, C = 510 $/day).

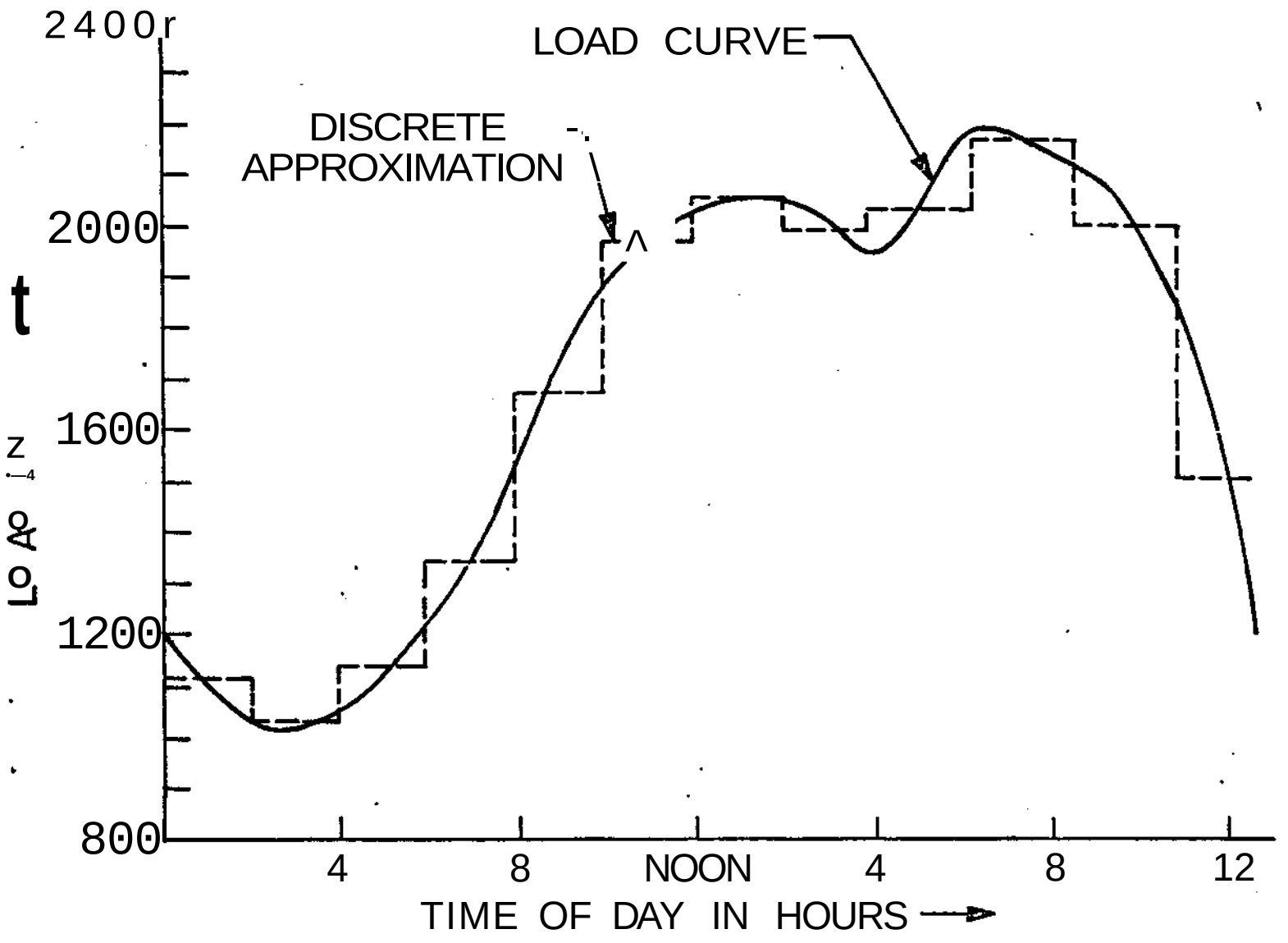
2400
2000
1600
1200
800
LOAD CURVE
DISCRETE
APPROXIMATION
4
8
NOON
4
8
12
TIME OF DAY IN HOURS

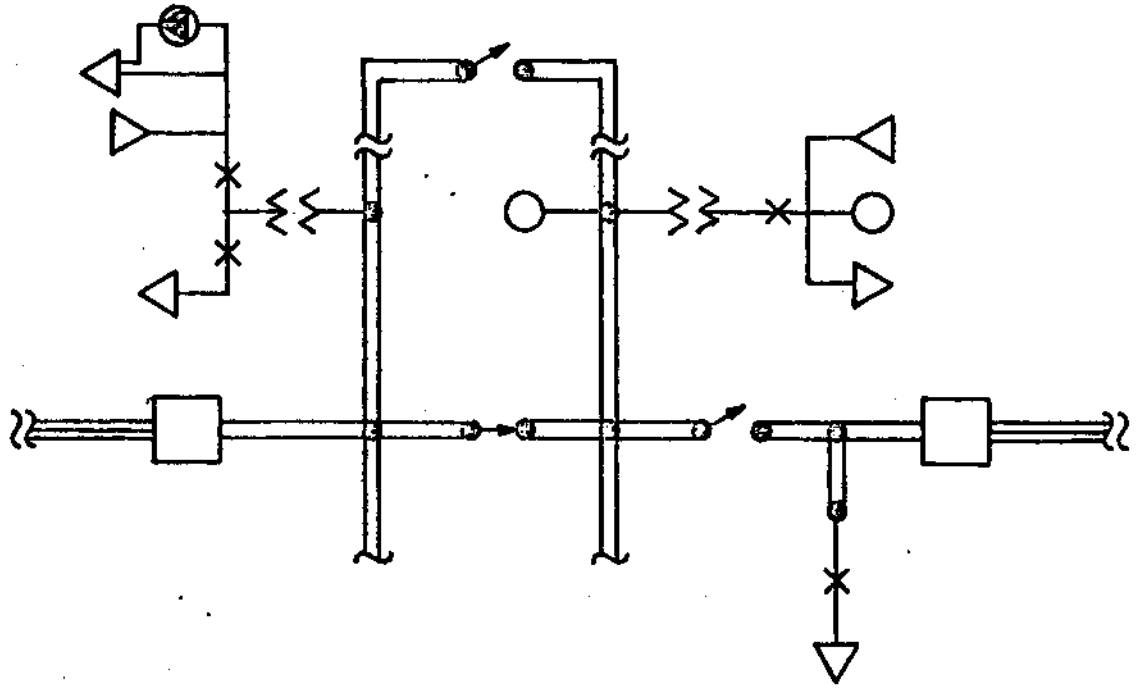

D	SUBSTATION	-{>	LOAD
0	NODE	°-*>	SWITCH
•K-	METER	-$$-	TRANSFORMER
O	ELECTRIC STORAGE	-#-	THERMAL STORAGE
—	DISTRIBUTION LINE	=—	TRANSMISSION LINE
▷—	GENERATOR		

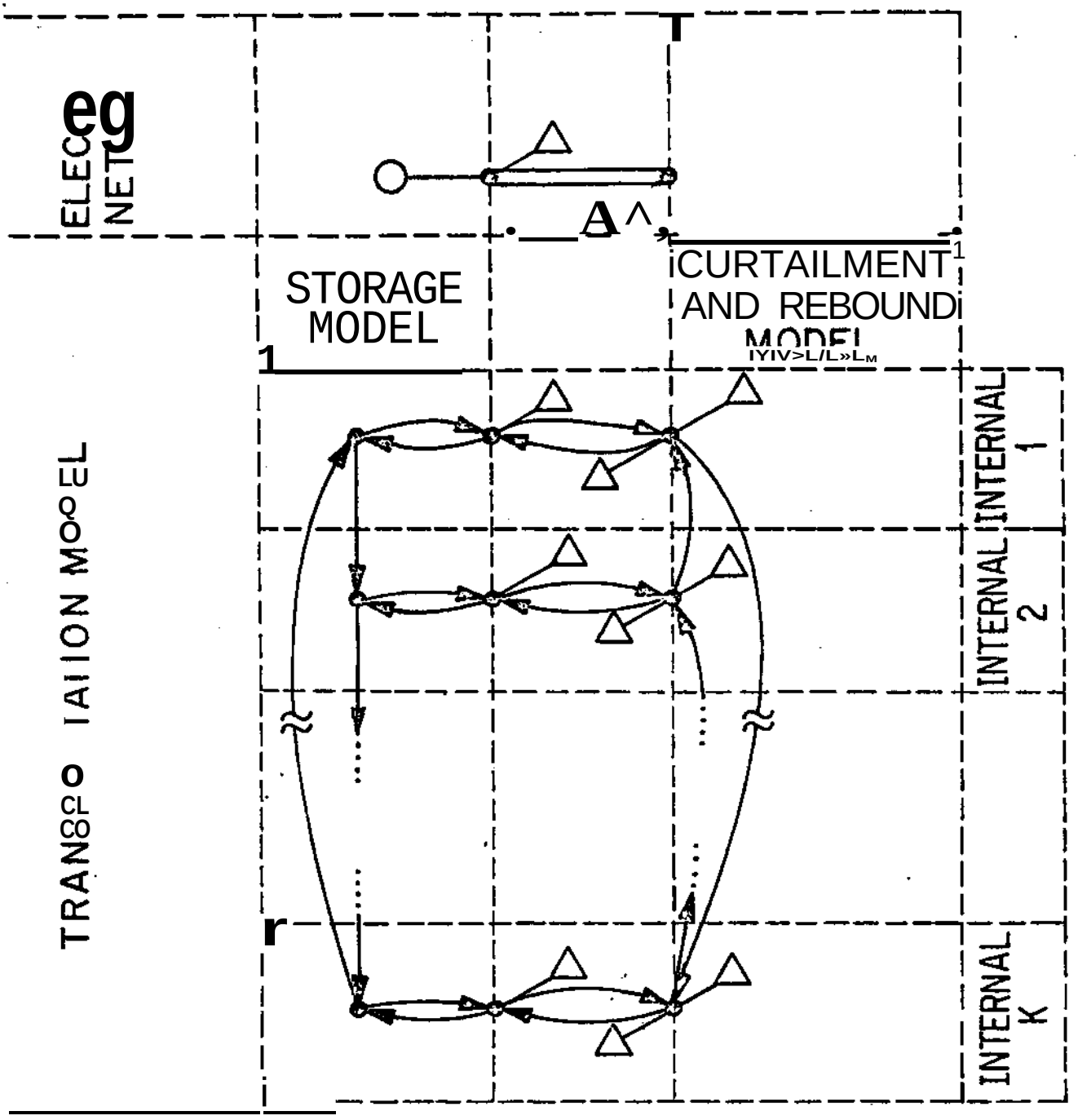

eg
ELEC
NET
STORAGE
MODEL
CURTAILMENT
AND REBOUND
MODEL
1
r
INTERNAL
1
INTERNAL
2
INTERNAL
K
SOURCE
STORAGE DEVICE
LOAD
DIRECTED ARC

Fig. 6

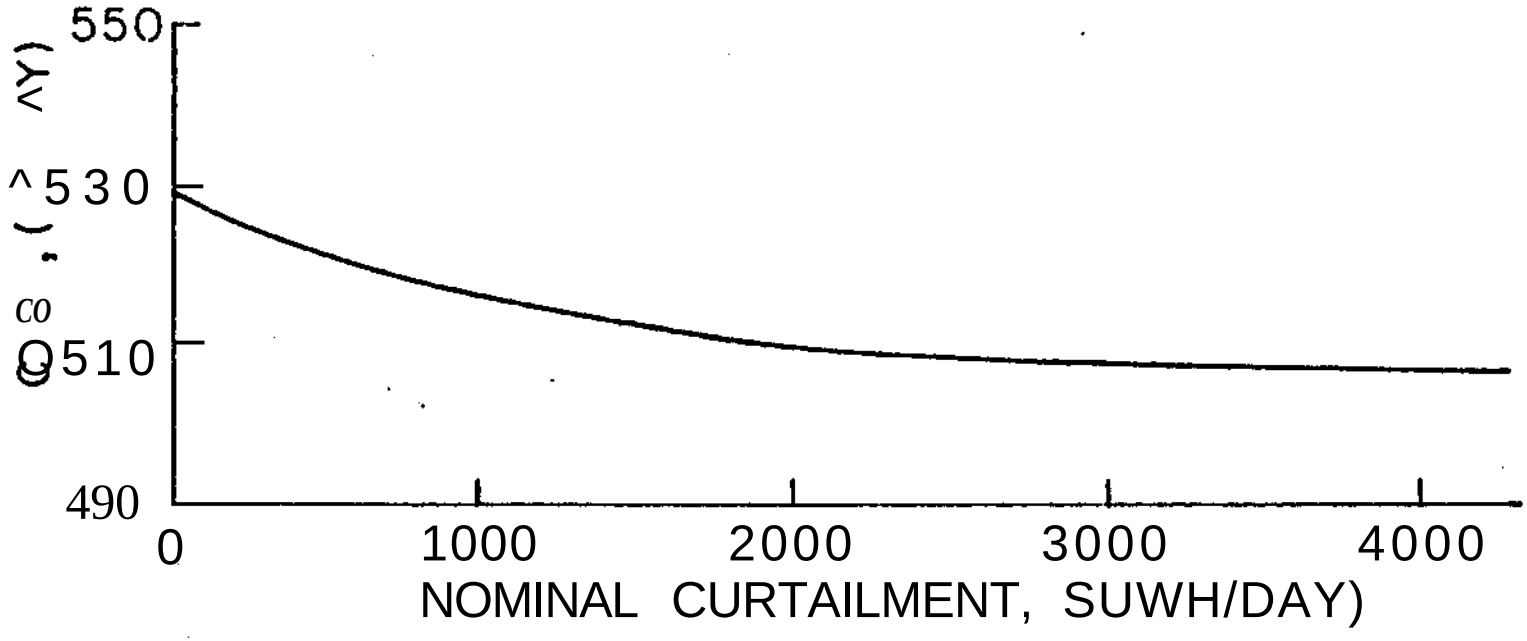
550
530
510
490
0
1000
2000
3000
4000
NOMINAL CURTAILMENT, SUWH/DAY)

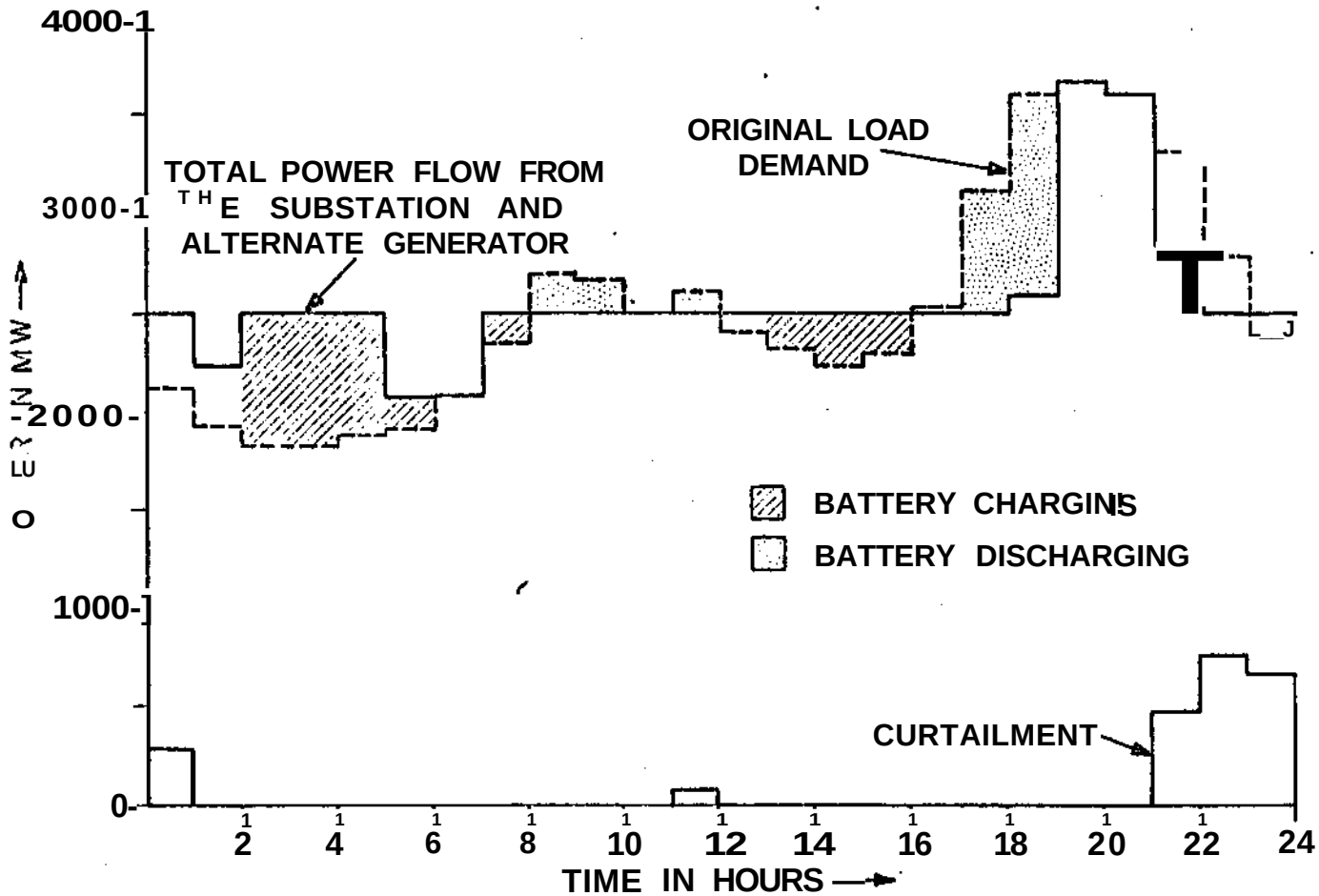
4000
3000
2000
1000
0
POWER IN MW
TOTAL POWER FLOW FROM THE SUBSTATION AND ALTERNATE GENERATOR
ORIGINAL LOAD DEMAND
BATTERY CHARGING
BATTERY DISCHARGING
CURTAILMENT
2
4
6
8
10
12
14
16
18
20
22
24
TIME IN HOURS