Carnegie Mellon University
Research Showcase @ CMU

Department of Chemical Engineering | Carnegie Institute of Technology

1984

Synthesis of flexible heat exchanger networks for multiperiod operation

Christodoulos A. Floudas
Carnegie Mellon University

Ignacio E. Grossmann

Follow this and additional works at: http://repository.cmu.edu/cheme

Published In

.

This Technical Report is brought to you for free and open access by the Carnegie Institute of Technology at Research Showcase @ CMU. It has been accepted for inclusion in Department of Chemical Engineering by an authorized administrator of Research Showcase @ CMU. For more information, please contact research-showcase@andrew.cmu.edu.

NOTICE WARNING CONCERNING COPYRIGHT RESTRICTIONS:
The copyright law of the United States (title 17, U.S. Code) governs the making of photocopies or other reproductions of copyrighted material. Any copying of this document without permission of its author may be prohibited by law.

SYNTHESIS OF FLEXIBLE HEAT EXCHANGER NETWORKS FOR MULTIPERIOD OPERATION

by

C.A. Floudas and I.E. Grossmann

DRC-06-70-84

December, 1984

SYNTHESIS OF FLEXIBLE HEAT EXCHANGER NETWORKS FOR MULT1PERIOD OPERATION

Christodoulos A. Floudas and Ignacio E Grossmann*

Department of Chemical Engineering
Carnegie-Mellon University
Pittsburgh, PA, 15213

September, 1984

* Author to whom correspondence should be addressed

(2

ABSTRACT

This paper addresses the problem of synthesizing heat exchanger networks that have the flexibility of coping with prespecified changes in flowrates, inlet temperatures and outlet temperatures in a finite sequence of time periods. A multiperiod version of the mixed integer linear programming (MILP) transshipment model is presented which accounts for the changes in pinch points and utility requirement at each tjme period. Using this model as a basis, a systematic procedure is proposed for synthesizing network configurations that require minimum utility cost for each period of operation and involve the fewest number of units. Application of this synthesis procedure is illustrated with two example problems.

SCOPE

A large number of synthesis procedures for the heat exchanger network problem have been published over the last fifteen years. Nishida *et al.*, [8] present an extensive review of these procedures. The most recently published procedures assume that a near optimal solution is characterized by networks that feature minimum utility cost and fewest number of units. Examples of these methods are the pinch design method of Linnhoff and Hindmarsh [6], the LP and MILP formulations based on the transportation model by Cerda and Westerberg [2] and the LP and MILP formulations based on the transshipment model by Papoulias and Grossmann [9]. The basic assumption however, behind all these methods is that the flowrates as well as the inlet and outlet temperatures of the streams, are specified with fixed values. Thus, these methods assume that the heat exchanger networks have only one single mode of operation.

Marselle *et al.* [7] and Saboo and Morari [10, 11] have addressed the more general problem of synthesizing heat exchanger networks where the flowrates and the inlet temperatures vary within given lower and upper bounds. To tackle this problem these authors identify a number of *worst operating conditions* and design the heat exchanger network for these critical conditions. For instance, Marselle *et al.* [7], adopt as worst conditions the ones corresponding to the maximum heating, the maximum cooling and the maximum total heat exchange. The objective is then to synthesize a network configuration that can handle these three *worst operating conditions.* Therefore, at this point they deal with a problem similar to synthesizing heat exchanger networks for multiple operating conditions. To face this problem, these authors suggest to design a heat exchanger network for each of the selected worst points of operation, and then combine manually these network configurations. However, no systematic procedure is given for the combination of these configurations which may require considerable trial and error effort since in principle these configurations can be quite different from each other. Furthermore, there is no

UNIVERSITY LIBRARIES
CARNEGIE-MELLON UNIVERSITY
PITTSBURGH, PENNSYLVANIA 15213

guarantee that these networks will feature the fewest number of units.

In this paper a systematic procedure is presented for the problem of synthesizing flexible heat exchanger networks for multiperiod operation. It is assumed that in general different values" are specified for the flowrates, inlet and outlet temperatures of the streams for N periods of operation. The objective in this problem will be to synthesize a network structure that is feasible for the N periods of operation, which has minimum utility cost at each period of operation and which requires the fewest number of units. To tackle this problem, multiperiod versions of the LP and MILP transshipment models proposed by Papoulias and Grossmann [9] are developed .These formulations take into account changes of pinch points in each period of operation. A systematic synthesis procedure based on these formulations is presented and illustrated with two example problems.

CONCLUSIONS AND SIGNIFICANCE

This paper has addressed the synthesis problem of flexible heat exchanger networks where flowrates, inlet and outlet temperatures can change in a finite set of periods of operation. These changes result, in principle, in different pinch points and changing subnetworks from one period to another. A systematic procedure based on a multiperiod MILP transshipment model has been developed for minimizing the number of units and the utility cost at each period of operation. The proper formulation of the objective function and the assignment of the binary variables in the mathematical formulation are of critical importance in order to maintain the one-to-one correspondence between the predicted matches and the units required in the network configuration. The application and effectiveness of the proposed procedure have been illustrated with two example problems.

INTRODUCTION

Chemical plants often operate at different conditions. Typically a plant will either process different feedstocks or operate at various capacity levels. Due to interactions between the chemical plant and the heat exchanger network, variations of operating conditions at the chemical plant will usually imply variations in the heat exchanger network. For instance, when a chemical plant processes feedstock A, for say the first two months, this will imply given values of flowrates and temperatures for the streams of the heat exchanger network. If operation is then switched to feedstock B, for say the following three months, this will normally result in different values of flowrates and temperatures for the streams of the heat exchanger network.

Since different operation modes in a plant will often result in different values of flowrates, i/ilet and outlet temperatures for the streams that participate in the heat exchanger network, the problem of synthesizing flexible network configurations which can handle a finite number of N different periods of operation becomes an important design problem.

Specifically, the problem which is to be addressed in this paper can be stated as follows:

Given is a set of hot streams H which have to be cooled, and a set of cold streams C which have to be heated. Flowrates, inlet and outlet temperatures are specified for these streams at N periods of operation. Auxiliary heating and cooling are available from a set S of hot utilities and a set W of cold utilities. The problem is then to synthesize a heat exchanger network configuration which remains feasible for the finite set of the N periods of operation, and which satisfies the two following criteria:

1. Minimum utility cost at each period of operation.
2. Minimum number of heat exchanger units.

The two criteria are based on the observation that a heat exchanger network which requires minimum operating cost (criterion 1) and fewest number of heat exchanger units (criterion 2) is very close to the economic optimal solution [6].

It should be noted that the two criteria cited above"- are independent of the length of each time period. Therefore, no duration need to be specified for the time periods. The case when the actual duration of some periods is rather small, which might not justify having full heat integration in them (i.e. .criterion 1), will be treated as a special case at the end of the paper in the discussion section.

The following basic assumptions will be made for modeling the multiperiod heat exchanger network synthesis problem :

1. The enthalpy of the process streams is a linear function of temperature.
2. A minimum temperature approach is specified by the design engineer.
3. The dynamic effect of changing flowrates, inlet arid outlet temperatures from one period to another is neglected.

In this paper, the (LP) and (MILP) transshipment models proposed by Papoulias and Grossmann [9] will be extended for synthesizing flexible heat exchanger networks for multiperiod operation. As will be shown, the extension of these models will take into account the changes of pinch points in each period of operation. Application of the proposed formulations will be illustrated with two example problems.

REVIEW OF THE TRANSSHIPMENT MODEL

The previous work which has been done by Papoulias and Grossmann [9] on the transshipment models for heat exchanger networks is based on the assumption that the flowrates and the inlet and outlet temperatures of the streams have fixed values. Under this assumption, this case corresponds to the synthesis of heat

exchanger networks for one period of operation. Since in this paper the transshipment models will be extended to the multiperiod ones, a brief review will be presented first for the one period case.

The LP version of the transshipment model by Papoulias and Grossmann [9] is used for the calculation of the minimum utility cost and the identification of the pinch points for a given set of hot and cold streams. As a first step, the whole temperature range is partitioned into K temperature intervals based on the inlet temperatures of the streams [4]. By applying heat balances for each temperature interval (see Fig. 1a), the utility cost problem can be formulated as follows:

$$\min \quad Z = \sum_{i \in S} CS_i \, (QS_i) + \sum_{j \in W} CW_j \, (QW_j)$$

st. (P1)

$$R_k - R_{k-1} - \sum_{i \in S_k} QS_i + \sum_{j \in W_k} QW_j = \sum_{i \in H_k} Q^h_{ik} - \sum_{j \in C_k} Q^c_{jk} \qquad k=1..K$$

$$R_0 = R_K = 0$$

$$R_k \geq 0 \qquad k=1,2...(K-1)$$

$$QS_i \geq 0 \qquad i \in S$$

$$QW_j \geq 0 \qquad j \in W$$

In the objective function QS_i, QW_j represent the duties of the hot and cold utilities with unit costs CS_i, CW_j respectively; S, W are the sets of hot and cold utilities respectively. The first set of constraints are heat balances around each temperature interval k, where k=1, to one corresponds to the interval with the highest temperature. As can be seen in Fig. 1a, the heat residuals that enter and leave the temperature interval k are represented by R_{k-1}, R_k respectively. Q^h_{ik}, Q^c_{jk} correspond

to the heat contents of hot stream i and cold j at interval k; the sets H_k, C_k stand for the set of hot streams i and cold streams j that are present at temperature interval k. The second set of equalities in (P1) denotes that the first and last heat residual are zero, while the rest of the constraints are the nonnegativity constraints. Note that the variables in this formulation are QS_I, QW_J and R_K. The solution of this LP transshipment model will result in the prediction of the minimum utility cost, and the identification of the pinch points which correspond to those temperature intervals whose outlet heat residuals have zero value.

Using the available information from the solution of the LP transshipment model (P1), which provides the minimum utility cost and the location of the pinch points, the set of temperature intervals is partitioned into subnetworks. The subnetworks are defined by subsets of temperature intervals which do not contain pinch points as shown in Fig. 2. Also, the required hot and cold utilities calculated from the LP are treated as additional hot and cold streams. That is, augmented sets of hot and cold streams { H_A , C_A) are defined to include both process streams, as well as, utility streams. With these considerations, an MILP transshipment model is developed for each subnetwork to determine the minimum number of matches and the heat to be exchanged at each of these matches. By denoting the possible existence of each match with 0-1 binary variables, the problem for minimum number of matches at each subnetwork is as follows [9] :

$$\min \sum_{i \in H_A} \sum_{j \in C_A} w_{ij} y_{ij}$$

s.t.

$$R_{ik} - R_{i,k-1} \bullet \sum_{j \in C_{Ak}} H_{ij} < v < \sum_{i \in H_{Ak}} v \quad k \in IT$$

$$\sum_{i \in H_{Ak}} Q_{ijk} = Q^{c}_{jk} \qquad j \in C_{Ak} \qquad k \in IT \qquad \text{(P2)}$$

$$\sum_{k \in IT} Q_{ijk} - U_{ij}\, y_{ij} \le 0 \qquad i \in H_A \qquad j \in C_A$$

$$U_{ij} = \min\{ \sum_{k \in IT} Q^{h,U}_{ik} , \sum_{k \in IT} Q^{c,U}_{jk} \}$$

$$R_{jk} \ge 0 \qquad i \in H_{Ak} \qquad k \in IT$$

$$Q_{ijk} \ge 0 \qquad i \in H_{Ak} \qquad j \in C_{Ak} \qquad k \in IT$$

$$y^{0,1} \qquad i \in H_A \qquad j \in C_A$$

The first two sets of constraints are energy balances for each hot stream i and each cold stream j around every temperature interval k (see Fig. 1b). IT is the index set for the temperature intervals involved in the subnetwork. H_{Ak} is the set of hot streams i and the hot utilities that exist at or above the temperature interval k. C_M is the set of cold streams j including the cold utilities that exist at the temperature interval k. The variables R_{jk}, R_{jk-1} are heat residuals which correspond to hot stream i at temperature intervals k and k-1 respectively. The variables Q_{ijk} denote the heat exchanged between hot stream i and cold stream j at temperature interval k. The term Q^{h}_{ik} is the heat load of hot stream i including the hot utility, that enters the temperature interval k. The term Q^{c}_{jk} is the heat load of cold stream j including the cold utility, that enters the temperature interval k.

The potential existence of a specific match between hot i and cold j, which is

associated to a potential unit in the network, is represented by the integer variables y_{ij}. The summation of continuous variables Q_{ijk} for a given pair (i, j), representing the total heat exchanged between these steams, is related with the integer variables y_{ij} by the third set of constraints. If y_{ij} is equal to zero, there is no match (i, j) and the amount of heat which is exchanged at this match must be zero. If y_{ij} is equal to one, the match (i, j) exists, but there must be an upper bound on the heat which is exchanged implied by the heat content which is available at the hot streams and the heat content that is needed at the cold streams. This upper bound is denoted by U_{ij}. The last two sets of constraints are the nonnegativity constraints which must exist for both the residuals R_{jk} and the heat exchanged Q_{jk}.

Finally, the objective function involves a minimization of a weighted sum of the number of matches that can possibly take place in the given subnetwork. If the weights w_{ij} are set to values of one, the objective function corresponds to the minimization of the number of matches, which as shown in Floudas and Grossmann [3], is equivalent to the number of units required in a feasible network. The one period MILP transshipment model (P2) can be solved independently for each subnetwork to determine the matches and the heat exchanged at each match via the y_{ij} and the Q_{ijk} variables, respectively. Based on this information, the final network structure is derived manually for each subnetwork. The final configuration is then simply given by joining the configurations of each subnetwork.

Floudas and Grossmann [3] have recently shown that with the MILP transshipment model (P2), a one-to-one correspondence can be established between the matches predicted by the binary variables and the units that are required in a feasible network structure. This structure may or may not involve splitting, mixing or by-passing of streams. Thus, with the solution of problem (P2) there is no need to either merge or introduce more units than what is predicted by binary variables in each subnetwork.

EXTENSION TO MULTIPERIOD PROBLEM

This paper will show how the transshipment models (P1) and (P2) can be extended for synthesizing heat exchanger networks under multiperiod operation. In particular, the following transshipment models will be considered:

1. Multiperiod LP transshipment model.
2. Multiperiod MILP transshipment model.

The multiperiod LP transshipment model will be used to determine the minimum utility cost and the location of the pinch points at each period of operation. On the other hand, the objective of the multiperiod MILP transshipment model is to determine the minimum number of matches that is required in a feasible network to achieve the minimum utility cost at each period of operation.

The extension of the one period LP transshipment model to multiperiod operation is straightforward. The LP transshipment model (P1) is simply solved for each period separately to identify the minimum utility cost and the location of the pinch points at each period of operation. Using the information on the location of the pinch points, corresponding subnetworks can be identified for each period of operation.

The extension of the one period MILP transshipment model (P2) to the multiperiod MILP transshipment model is however, a nontrivial task. This is due to the fact that in principle the location and the number of pinch points from one period of operation to another can change. This implies that from one period to another the number and the boundaries of the subnetworks can undergo substantial changes. Therefore, the main question which then arises is how to assign the binary variables at the subnetworks of each period, and how to formulate a suitable objective function for minimizing the number of units which accounts for the fact that these units can be shared among the various periods of operation.

OBJECTIVE FUNCTION FOR CHANGING SUBNETWORKS

In **a** network under multiperiod operation, the pinch points/ and so the subnetworks, may in principle change from one period to another. Therefore, in order to formulate the multiperiod MILP transshipment model it is necessary to account for the fact that units must perform multiple tasks, while keeping in mind that the objective is to develop a feasible network structure which has minimum utility cost at the N periods of operation, and involving the fewest number of units.

In this work the following major assumptions will be made on the heat exchanger units for a flexible network for multiperiod operation:

1. Each unit can handle variable heat loads.
2. Each unit is assigned to the same pair of hot and cold streams at each period of operation.
3. When a given pair of streams exchanges heat over several subnetworks in a given period of operation, a different unit is required for that pair of streams in each subnetwork.

The first assumption implies the availability of by-passes in each heat exchanger unit to adjust the desired heat loads. The second assumption is used for practical convenience, because otherwise extensive piping may be required to use a given unit for different pairs of streams. Finally, the last assumption merely ensures that no heat exchanger crosses the pinch point. This assumption is not really required as shown recently by Wood *et al.* [13]. However, since usually large areas are obtained if heat exchangers cross the pinch, the third assumption will be used instead.

From the solution of the *UP* transshipment model (P1) for each period of operation, the location of the pinch points at each period is available. The location of these pinch points is used to partition the temperature intervals into subnetworks for each period (see Fig. 2). Thus, the pinch points and the subnetworks that correspond to each period of operation are known prior to developing the network

structure.

Consider that the binary variable y_{ijs_t} is defined to denote a match between hot stream i and cold stream j at the subnetwork s_t of period t. If one were to formulate the multiperiod version of the (MILP) transshipment model as the minimization of the sum of these binary variables, subject to the constraints as in (P2) for all the subnetworks in each period, this would be clearly equivalent to synthesizing a network independently for each time period. The reason. is that this objective function would not recognize that it is better to have units that can be assigned to the same pair of streams at different time periods.

In order to circumvent this problem, the objective function to be formulated must try to minimize the number of different units that should be included in the network structure. The number of units that is required for a given pair of streams (i, j) at N periods of operation, is given in terms of the binary variables for that pair by :

$$u_{ij} = \max_{t=1,2...N} \left\{ \sum_{s_t \in IS_t} y_{ijs_t} \right\} \qquad (1)$$

where IS_t is the index set for the subnetworks at each period of operation t. As shown by equation (1), u_{ij} corresponds to the largest number of matches that must be performed for the pair (i, j) at any given period t. Since the objective is to minimize the number of units required for all hot and cold processing streams and utilities, the objective function for the multiperiod MILP transshipment model can then be expressed as :

$$\min \sum_{i \in H_A} \sum_{j \in C_A} \left[\max_{t=1,2...N} \left\{ \sum_{s_t \in IS_t} y_{ijs_t} \right\} \right] \qquad (2)$$

where H_A is the augmented set of hot streams and hot utilities, and C_A is the augmented set of cold streams and cold utilities. The objective function in (2) will

then minimize the actual number of units that is required for a network under multiperiod operation.

In order to give some insight as to how the objective function in (2) discriminates networks with fewer number of units, consider the example in Table 1 which involves two hot streams H1, H2, two cold streams C1, C2, a hot utility S and a cold utility W. Two periods of operation are considered ; the first one with a pinch point, the second without a pinch point. Both options require 8 matches in period 1 (4 above and 4 below the pinch) and 4 matches in period 2. As can be seen, option A requires 8 units since the four matches in period 2 can be performed with the same units of period 1. On the other hand, option B requires 10 units since period 2 uses two matches (H2-C1 and S-C1) which are not performed in period 1. Clearly, option A is the preferred one. It can be easily verified that the objective function (2) would select option A because it predicts precisely 8 units for this option and 10 units for option B.

The main drawbacks of the objective function (2) are that it involves a max operator, and that it requires defining a rather large number of binary variables for the solution of the multiperiod (MILP) model. However, both of these drawbacks can be circumvented as shown below.

The max operator in the objective function (2) can be easily removed by reformulating (1) as :

$$\min \sum_{i \in H_A} \sum_{j \in C_A} u_{ij} \qquad (3)$$

$$\text{st.} \quad u_{ij} \geq \sum_{s_t \in S_t} y_{ijs} \qquad i \in H_A \quad j \in C_A \quad t=1...N$$

where u_{ij} is treated as a scalar variable which will be equal to the max expression in

(1), since at least one of the inequalities in (3) will become active due to the linearity of the objective function. The price one clearly pays with this reformulation is the introduction of a potentially large number of inequalities. However, these can greatly be reduced together with the binary variables based on the following observation.

In networks under multiperiod operation, many pairs of hot and cold streams (i, j) satisfy either of the two following conditions :

Condition A : The match for the pair (i, j) is only possible in a single subnetwork at each time period.

Condition B : The match for the pair (i, j) is possible in several subnetworks in only one period of operation denoted as the *dominant period*; in all the other periods the match is only possible in a single subnetwork.

These conditions can be exploited to simplify the objective function in (3) as follows. For the case when condition A holds, it is known a priori that not more than a single unit is required for the pair (i, j) since there is potentially only one match per period. Therefore, in this case the variable u_{ij} can be replaced by a single binary variable y^A_{ij}. That is,

$$u_{ij} = y^A_{ij} \qquad (i, j) \in P_A \qquad (4)$$

where P_A will denote the pairs (i, j) that satisfy condition A. This in turn implies that the binaries y_{ijs_t} can be replaced by y^A_{ij} and that the inequalities in (3) are not required for this case. An example for this case is given in Fig. 3 in which the pair (i, j) can potentially exchange heat in the intermediate subnetwork of period 1, the bottom subnetwork of period 2 and in period 3 which has only one subnetwork. As can be seen the binary y^A_{ij} can be assigned to the match (i, j) in the three periods to represent the potential existence of the unit.

For the case when condition B holds, it is known a priori that in the dominant period, where the pair (i, j) can possibly exchange heat in several subnetworks, units can become available for the other periods where the same match is possible

in a single subnetwork. Furthermore, when matches for this pair are involved in the dominant period, this will define the maximum number of units. Hence, in this case the variable u_{ij} can be replaced by a summation of binary variables for only the dominant period. That is.

$$u_{ij} - \overline{\sum_{s_d \in IS_d}} v_{ijs_d} \qquad (I.J) \in P_B \qquad \langle B \rangle$$

where $y^B_{ijs_d}$ are binary variables associated with the subnetworks s_d of the dominant period d, and P_B is the set of pairs (i, j) that satisfy condition B. This implies that the inequalities in (3) are not needed in this case, and that the binary variables y_{ijs_t}, s G IS, t=1JSI can be replaced by y? , s. 6 IS . In the dominant period these variables represent a potential unit in each subnetwork, while in the non-dominant periods their summation will represent the possible availability of these units.

To illustrate this case, consider the example in Fig. 4 in which the pair (i, j) can potentially exchange heat in the three subnetworks of period 1, in the bottom subnetwork of period 2 and in period 3 which has only one subnetwork. Thus the pair (i, j) satisfies condition B. Note that the three binary variables are defined for each subnetwork in period 1, while their summation is assigned to the subnetworks in period 2 and 3. In this way, one or more matches in period 1 will make these units available for periods 2 and 3. On the other hand, if no match is performed in period 1 but rather in periods 2 and 3, one of the three binary variables will be forced to take a value of one denoting the existence of a unit. Clearly, in this case not more than one binary variable would take the value of one because u_{ij} as given by (5) is minimized in (3). Thus, condition B allows for a given pair of streams the treatment of non-dominant periods through the binary variables of the dominant period.

It should be noted that matches satisfying conditions A and B can be readily identified' from the solution of the (LP) transshipment model for the N periods of

operation. Also, although conditions A and B may appear to be rather restrictive, in practical applications most pairs of streams tend to satisfy these conditions. Therefore, usually only a modest number of binary variables has to be used to represent the potential units in a network under multiperiod operation.

It should also be noted that for pairs of streams not satisfying conditions A or B, one could possibly use a reduced number of binary variables, but then there is no guarantee that the minimum number of units will be obtained. To illustrate this case consider the example in Fig. 5, where the pair of streams (i, j) can potentially exchange heat above and below the pinch in both periods. Thus, neither condition A nor B is satisfied. Suppose that instead of using the binary variables y_{ij11}, y_{j12} for period 1, and Y_{ij} 2y ^j j22 *or Per*o<* 2, one would assign the variable y^1_{ij} for matches above the pinch in the two periods and the variable y^2_{ij} for matches below the pinch in the two periods (see Fig. 5). The following situation would then occur. If in either period matches take place above and below the pinch, the two binaries will be activated so that two units will be predicted which is the correct number. If the matches take place above the pinch in the two periods, y^1_{ij} will be activated; if the matches take place below the pinch in the two periods, y^2_{ij} will be activated. In these cases one unit will be predicted which again is the correct number. However, suppose that in period 1 the match takes place above the pinch and that in period 2 it takes place below the pinch. Clearly both y^1_{ij} and y^2_{ij} will be activated predicting two units. However, this is incorrect since only one unit is required which can be used in the two periods. Therefore, in general for pairs not satisfying conditions A and B, one would have to assign individual binary variables y_{ijst} to each period in the objective function in (3) to predict the correct number of units.

MULTIPERIOD MILP FORMULATION

Having addressed the problem of formulating a suitable objective function and assigning proper binary variables for minimizing the number of units in flexible networks for multiperiod operation, the MILP transshipment model proposed by Papoulias and Grossmann [9] will be extended for this problem.

To formulate mathematically the multiperiod MILP transshipment model, the following indices and index sets are restated :

Indices

- i hot streams (including hot utilities)
- j cold streams (including cold utilities)
- k temperature interval
- s_t subnetwork of period t
- t period of operation
- d dominant period

Index sets

- H_A hot streams and hot utilities
- C_A cold streams and cold utilities
- IS_t subnetworks s_t at period t
- IT_{s_t} temperature intervals for s_t
- P_A pairs of streams (i, j) satisfying condition A
- P_B pairs of streams (i, j) satisfying condition B

The mathematical formulation of the MILP transshipment model for minimizing the number of units for N periods of operation, and over all the subnetworks, is then the following:

$$\min \sum_{i \in H_A} \sum_{j \in C_A} u_{ij} \qquad (P3)$$

s.t.

(a) CONSTRAINTS FOR NUMBER OF UNITS

$$u_{ij} \le Y_u^A \qquad (i, j) \in P_A$$

$$u_{ij} \le \sum_{s_d \in IS_d} Z_{s_d} \qquad (i, j) \in P_B$$

$$u_{ij} \le \sum_{s_t \in IS_t} Z_{s_t} y_{ijs_t} \qquad t = 1..N \qquad i \in H_A \qquad j \in C_A \qquad (i, j) \in P_A, P_B$$

(b) HEAT BALANCE CONSTRAINTS

$$R_{iks_t} - R_{i,k-1,s_t} + \sum_{j \in C_{Akt}} Q_{ijks_t} = Q^h_{iks_t} \qquad i \in H_{Akt} \qquad k \in IT_{s_t} \quad s_t \in IS_t \qquad t = 1..N$$

$$\sum_{i \in H_{Akt}} Q_{ijks_t} = Q^c_{jks_t} \qquad j \in C_{Akt} \qquad k \in IT_{s_t} \qquad s_t \in IS_t \qquad t = 1..N$$

(c) LOGICAL CONSTRAINTS

$$\sum_{k \in IT_{s_t}} Q_{ijks_t} - U^{s_t}_{ij} \; y^A_{ij} \le 0 \qquad s_t \in IS_t \qquad t = 1..N \qquad (i, j) \in P_A$$

$$\sum_{k \in IT_{s_d}} Q_{ijks_t} - U^{s_t}_{ij} \sum_{s_d \in IS_d} y_{ijs_d} \leq 0 \qquad s_d \in IS_d \qquad t \neq d$$

$$\sum_{k \in IT_{s_t}} Q_{ijks_t} - U^{s_t}_{ij} \sum_{s_d \in IS_d} y_{ijs_d} \leq 0 \qquad s_t \in IS_t \qquad t = 1, \ldots, N \qquad i \in H_A \qquad j \in C_A \qquad (i, j) \notin P_A, P_B$$

(d) NONNEGATIVITY CONSTRAINTS

$$R_{ik} \geq 0$$

$$U^{s_t}_{ij} \geq 0$$

(e) 0-1 CONSTRAINTS

$$y_{ijs_t} = 0\text{-}1, \quad y^A_{ij} = 0\text{-}1, \quad y^B_{ij} = 0\text{-}1$$

The objective function in (P3) represents the number of units required for a network under multiperiod operation as discussed in the previous section. In the actual implementation the variables u_{IJ} for the pairs (i, j) € P_{AS}, defined in the first two equations in (a), can clearly be eliminated and substituted in the objective function.

The constraints in (b) represent similar heat balances as in Fig. 1b for hot stream i and cold stream j, respectively, at every temperature interval k of each subnetwork s_t in the period of operation t, H_A is the set of hot streams present at

or above the interval k in period t. C_{Akt} is the set of cold streams present in interval k of period L The variables R_{IRSt}, $R_{I, K''' 1, St}$ are heat residuals that correspond to hot stream i, at subnetwork s_t of period t and temperature intervals k and k-1, respectively. The variable *d...* denotes the heat exchanged between hot stream i and cold stream j at temperature interval k at subnetwork s_t. The constant term Q^{s_t} is the heat load of hot stream i entering the temperature interval k in subnetwork s_t. The constant term $Q^{c}_{jKs_t}$ is the heat load of cold stream j entering the same tempetature interval in period t.

To relate the heat exchanged between a pair (i, j) (summation of continuous variables Q_{IJKSt}) with the binary variables y_{IJ}, y^{*}_{IJ}, y^{B}_{IJS}, the next set of four inequalities in (c) are introduced, where U^{ix} represents the upper bound for possible heat exchange between streams (i, j) at subnetwork st. This upper bound can be computed a priori, and is given by the smallest of the heat contents of hot stream i and cold stream j in subnetwork st. The first inequality applies to pairs satisfying condition A; the next two for pairs satisfying condition B; the last one for pairs not satisfying either of the two conditions. Each inequality has simply the effect of preventing the transfer of heat between a hot stream i and cold stream j in a given subnetwork s_t when no unit is selected for the corresponding pair. That is the corresponding sum of Q_{IJKs_t} is forced to zero if the corresponding binary variables are also set to zero. In the case when the binary variables are set to one, the inequality merely states that the total heat exchanged in a given subnetwork for a given pair (i, j) is limited by the upper bound U^{ij}.

Finally, the constraints in (d) and (e) represent non-negativity constraints for the continuous variables and 0*1 constraints for the binary variables.

Problem (P3) corresponds to a mixed integer linear programming problem which can be solved with standard branch and bound enumeration methods. It should be noted that in general this problem cannot be decomposed into the solution of

subnetworks as with the one period problem (P2). The reason is that in (P3) there are interactions between subnetworks. These are caused by the binary variables in the third constraint and in the logical inequalities in (C) for the pair (i, j) 6 P_. Therefore, in general, problem (P3) must be solved simultaneously.

The importance of the above formulation, is that it provides the basic information required to derive a flexible heat exchanger network structure for multiperiod operation. This information consists in matches that take place, and the heat exchanged in them at every period of operation. Furthermore, the matches can be associated with specific units for the network configuration.

SYSTEMATIC PROCEDURE FOR THE MULTIPERIOD PROBLEM

Having derived the mathematical model for multiperiod operation, the complete synthesis procedure can be stated to derive a feasible heat exchanger network configuration with the minimum number of units, and which requires minimum utility cost for the N periods of operation. Specifically, the steps are as foMows:

1. For each period of operation :
   a. Partition the temperature range into temperature intervals using the inlet temperatures of the process streams at that period [4].
   b. Derive the energy balance equations at each temperature interval and solve the LP transshipment model (P1) to determine for that period of operation:
      i. Pinch points.
      ii. Duties of the hot utilities, QS_i , i € S.
      iii. Duties of the cold utilities, QW_j , j € W.
2. Using the available information on the pinch points for each period, determine the corresponding subnetworks. Define the set P_A of pairs (i, j) that are involved in a single subnetwork at each period of operation; define the set P_B of pairs (i, j) that are involved in only one dominant period at several subnetworks.

3. Formulate and solve the multiperiod MILP transshipment formulation (P3) to find the minimum number of matches using the utilities predicted in step 1. This solution yields:

   a. The required matches for the streams.

   b. The heat that is transferred at each match for every period of operation.

4. Using the information provided at step 3, a configuration of the heat exchanger network which satisfies all the periods of operation is derived manually.

The above systematic procedure will aid the engineer to derive a feasible configuration for the heat exchanger network which operates under different operating conditions. It should be noted that this procedure does not generate automatically the actual network structure, but it provides the information as to which matches should take place for the different units, and how much heat they must exchange at each time period. It is also important to note that this procedure does not address the problem of sizing the heat exchangers in the final network configuration. As suggested by Beautyman and Cornish [1], the areas could be selected as the largest area that is required at a given period in each heat exchanger unit since by-passes are assumed around each unit. An alternative approach would be to optimize the areas using the projection-restriction strategy for optimal multiperiod design problems proposed by Grossmann and Halemane [5].

EXAMPLE 1

This example problem consists of two hot, two cold streams, one hot and one cold utility. There are three periods of operation in which the flowrates, the inlet and outlet temperatures take different values, The data for these periods of operation are shown in Table 2. The objective is to derive a heat exchanger network which is feasible for the three periods of operation, and requires minimum utility cost with the fewest number of heat exchangers. By assuming a minimum temperature approach of 10C, the whole temperature range is partitioned into temperature intervals based on ail the inlet temperatures of the streams at each of the three periods of operation. Solving the LP transshipment problem for minimizing the utility cost at each period of operation yields the results shown in Table 3.

Note that no pinch occurs in period 2 and that the pinch points are different in periods 1 and 3. Hence, period 2 has only one subnetwork while periods 1 and 3 have two subnetworks as shown in Fig. 6. Period 2 requires the largest amount of steam, while period 3 requires the largest amount of cooling water. In particular, the hot utility changes from 338.4 to 1602.128 and to 10 kW, while the cold utility changes from 432.154 to 0 and to 1793.146 kW. Therefore, the utility requirement from period to period changes quite drastically.

Since the network requires steam and cooling water, the total number of streams involved are the hot streams H1, H2, S (Steam) and the cold streams C1, C2, W (Water). Using the information about the subnetworks shown in Fig. 6, one can identify which pairs of streams (i, j) satisfy condition A or condition B. The pairs of streams satisfying condition A (i.e. pairs that can only exchange heat in only one subnetwork at each period of operation) are the following:

P_A = { H1-C1, H1-C2, H2-C1, H1-W, H2-W, C2-S }

Hence, each of the six pairs of streams above requires the assignment of a single

binary variable y_{ij}^{A}.

The only pair of streams satisfying condition B is the pair P_B = { H2-C2 }, since it is involved in the two subnetworks of period 1 and in one subnetwork for periods 2 and 3 as seen in Fig. 6. Hence, this pair requires the assignment of the binaries $y_{H2,\ C2,\ 1}$, $y_{H2,\ C2,\ 2}$ for the top and bottom subnetworks in period 1. Their summation is considered to be the potential units for periods 2 and 3. Since all pairs of streams satisfy either condition A or condition B, this implies that the multiperiod MILP transshipment model can be formulated with a total of eight binary variables.

The resulting multiperiod MILP transshipment model involves 8 binary variables, 55 continuous variables and 67 rows. Solving this problem using the LINDO computer code [12], seven units are predicted for the flexible network configuration. The corresponding matches and the heat exchanged at each unit in each period of operation are shown in Table 4. The CPU time (DEC-20) for solving the multiperiod MILP transshipment model was 20 seconds.

Using the information in Table 4, a configuration of the heat exchanger network is derived manually as shown in Fig. 7. Notice that in this configuration there is splitting of the first hot stream (H1) and of the second cold stream (C2). Also notice that there are two heat exchanger units, 2 and 5, for the same match H2-C2. In period 1, the pinch point that occurs at 249-239C, takes place between these two units. In period 3, the two units lie below the pinch point which occurs at 259-249C; hence the unit 2, after the mixing point for C2, is shut. At period 2, this unit is also shut together with the units 6 and 7 for cooling water. The utilities required by this configuration at each time period are the minimum utilities shown in Table 3.

To appreciate the importance of the systematic procedure presented in this paper, consider the heuristic approach in which heat exchanger networks are synthesized separately for each period, and then combined manually into a final

network.

Suppose a configuration is derived for each period separately using information from the minimum utility consumption for each period in Table 3. These configurations are shown in Fig. 8. These networks are clearly quite different from the configuration shown in Fig. 7. Furthermore, if one were to combine the matches from the three networks in Fig. 8 the following 8 matches are obtained :

{ H1-C2, H1-C1, H2-C2, H2-C2, H2-C1, S-C2, H1-W. H2-W }

But the configuration found in Fig. 7, that was obtained with the multiperiod (MILP) transshipment model, has the following 7 matches:

{ H1-C2, H1-C1, H2-C2, H2-C2, S-C2, H1-W, H2-W }

Therefore the match H2-C1 that is predicted by the heuristic approach does not exist in Fig. 7, This means that, apart from the fact that it could be a non-trivial task to combine the configurations for the different periods in Fig. 8, the resulting network with the heuristic approach would feature one more unit than the network in Fig. 7.

EXAMPLE 2

This example problem consists of four hot, three cold streams, one hot and one cold utility. There are three periods of operation in which only the flowrates take different values. The data for these periods of operation are shown in Table 5. The objective is to derive a heat exchanger network which is feasible for the three periods of operation and requires minimum utility cost with the fewest number of heat exchangers. Assuming a minimum temperature approach of 10C, the whole temperature range is partitioned into temperature intervals based on the inlet temperatures of the streams. Solving the LP transshipment problem for minimizing the utility cost at each period of operation yields the results shown in Table 6.

Note that no pinch occurs in period 3 and that the pinch points are different in periods 1 and 2. Period 2 requires the largest amount of steam while period 3 requires the largest amount of cooling water. In particular, the hot utility changes from 11 to 231.36 to 0 kW while the cold utility changes from 1531,96 to 347.424 to 2925.856 kW.

Using the information about the location of the pinch points at each period of operation, the corresponding subnetworks can be identified as shown in Fig. 9. From this figure the following 10 pairs of streams are involved in only one subnetwork, satisfying condition A:

P_A ={ H1-C3, H2-C3, H3-C3, H1-W, H2-W, H3-W, H4-W, S-C1, S-C2, S-C3 }

Hence, each of the pairs in P_A requires the assignment of a single binary variable y^A_{IJ}.

Also from Fig. 9, the pairs of streams present in two subnetworks at only one period of operation, which, satisfies condition B, are the following 9 pairs:

P_B={H4-C3, H1-C1, H1-C2, H2-C1, H2-C2, H3-C1, H3-C2, H4-C1,H4-C2}

The dominant period for H4-C3 is period 1, while for the rest of pairs the dominant period is period 2. Hence, each pair in P_D requires the assignment of two binary variables. Since no other pairs of streams violate conditions A or B, a total of 28 binary variables is required for the muUiperiod MILP transshipment model (10 for P_A, 18 for P_B).

The resulting multiperiod MILP transshipment model involves 28 binary variables, 217 continuous variables and 169 rows. Solving this problem using the UNDO computer code [12], 14 units are predicted for the flexible network configuration. The corresponding matches and the heat exchanged at each unit in each period of operation are shown in Table 7. The CPU time (DEC-20) required to solve this problem was 311 seconds.

Using the information in Table 7 a configuration of the heat exchanger network

is derived manually as shown in Fig. 10. In this configuration there is splitting of the second cold stream (C2), of the third cold stream (C3> and of the fourth hot stream (H4). Notice that there are two heat exchanger units, (2 and 3), for the match H4-C3, and two units, (4 and 9), for the match H1-C2. Two units are required for the match H4-C3 since these streams exchange heat in period 1 above and below the pinch point which occurs at 249-239C. Similarly, two units are required for the match H1-C2 since these streams exchange heat in period 2 above and below the pinch point which occurs at 150-140 C. Also, from Table 7 and Fig. 10, it can be seen that not all heat exchanger units are used in the three time periods.

DISCUSSION

As has been illustrated with the two example problems, the proposed procedure provides a systematic approach for synthesizing flexible heat exchanger networks for multiperiod operation. This procedure involves the solution of the LP transshipment model at each period of operation, and the solution of a multiperiod MILP transshipment model. These models can be solved with reasonable computer time as has been shown in the examples.

It should be pointed out, however, that the bottleneck in the proposed procedure is the manual derivation of the network configuration based on the matches and heat exchanged at each match and at each time period predicted by the multiperiod MILP model. A promising approach, however, would be the extension of a recent procedure by Floudas and Grossmann [3] for the automatic generation of network configurations for a single period of operation. This procedure, which is based on nonlinear programming, derives the network configuration from the solution of the one - period (MILP) transshipment model. The automatic synthesis of networks for multiperiod operation, which includes the sizing of exchangers, will be the subject of a future publication.

Finally, it should be noted that the assumption of imposing the criterion for minimum utility cost at each time period could be relaxed using the following strategy. Consider that from the N periods of operation, only a subset of 1ST periods are long enough to justify their maximum heat integration. Problem (P3) could then be solved for these N' periods so as to determine the matches required for the network structure. The utility cost for each of the remaining N-N' periods could then be minimized, with the constraint of using as only possible process stream matches, those determined for the N' periods. The solution for each of the N-N' periods would then be as follows:

1. Solve the (LP) transshipment model (P1) to identify the subnetworks that arise when there no restrictions on matches.

2. Formulate a modified version of the (MILP) transshipment model (P2) which treats the heat loads of the utilities as variables and has the following features :

   a. The objective function of (P2) is replaced by the utility cost.

   b. Heat balances are included for all subnetworks.

   c. Constraints are placed on the binary variables, which state that the number of matches for a given pair of process streams must be less or equal than the number of matches determined for that pair in the N' periods.

In this way, this procedure will determine the minimum utility cost for each of the N-N' periods, but using only the process stream matches that are required for the N' periods.

ACKNOWLEDGEMENT

Financial support from the National Science Foundation under grants CPE-8121665 and CPE-8315237, is gratefully acknowledged.

REFERENCES

[1] Beautyman, A.C. and A.R.H. Cornish, *"The Design of Flexible Heat Exchanger Networks"*, presented at the First U.K. National Heat Transfer Conference, Leeds, July 1984.

[2] Cerda, J., A.W. Westerberg, D. Mason and B. Linnhoff, *"Minimum Utility Usage in Heat Exchanger Network Synthesis"*, Chem. Eng. Sci., 38, 373(1983).

[3] Floudas, C.A. and I.E. Grossmann, *"Automatic Synthesis of Optimal Heat Exchanger Networks"*, manuscript in preparation (1984).

[4] Grimes, L.E., M.D. Rychener and A.W. Westerberg, *"The Synthesis and Evolution of Networks of Heat Exchange that Feature the Minimum Number of Units"*, Chem. Eng. Commun., 14, 339(1981).

[5] Grossmann, I.E. and K.P. Halemane, *"Decomposition Strategy for Designing Flexible Chemical Plants"*, AIChE J., 28, 686(1982).

[6] Linnhoff, B. and E. Hindmarsh, *"Pinch Design Method for Heat Exchanger Networks"*, I. Chem. E. Symposium, No. 74-*"Understanding Process Integration"* (Lancaster, U.K.)(1982).

[7] Marselle, D.F., M. Morari and D.F. Rudd, *"Design of Resilient Processing Plants-II: Design and Control of Energy Management Systems"*, Chem. Eng. Sci., 37, 259(1982).

[8] Nishida, N., G. Stephanopoulos and A.W. Westerberg, *"Journal Review: Process Synthesis"*, AIChE J., 27, 321(1980).

[9] Papoulias, S.A. and I.E. Grossmann, *"A Structural Optimization Approach in Process Synthesis. Part II: Heat Recovery Networks"*, Computers and Chemical Engineering, 7, 707(1983).

[10] Saboo, A.K. and M. Morari, *"Design of Resilient Processing Plants-IV. Some New Results on Heat Exchanger Network Synthesis"*, Chem. Eng. Sci., 39, 579(1984).

[11] Saboo, A.K., M. Morari and D.C. Woodcock, *"Design of Resilient Processing Plants- A Resilience Index for Heat Exchanger Networks"*, submitted to Chem. Eng. Sci. (1983).

[12] Schrage L.E., *User's Manual for LINDO*. The Scientific Press, Palo, Alto (1981).

[13] Wood , R., R.J. Wilcox and I.E. Grossmann, *"A Note on the Minimum Number of Units for Heat Exchanger Network Synthesis*, submitted for publication (1984).

Table 1: Example for objective function

MATCHES OF OPTION A		MATCHES OF OPTION B	
Period 1	Period 2	Period 1	Period 2
H1-C1		H1-C1	
H1-C2		H1-C2	
H2-C2	H1-C1	H2-C2	H1-C1
S-C2 *	H1-C2	S-C2 *	H1-C2
H1-C1	H2-C2	H1-C1	H2-C1
H1-C2	S-C2	H1-C2	S-C1
H2-C2		H2-C2	
H2-W		H2-W	

NUMBER OF UNITS

OPTION A : 8 units { 2 for H1-C1. H1-C2, H2-C2
1 for S-C2, H2-W }

OPTION B : 10 units { 2 for H1-C1. H1-C2. H2-C2
1 for H2-C1, S-C1. S-C2, H2-W }

* Line indicates division between subnetworks

Table 2: Data for the example 1

PERIOD 1

Stream	Fc_p [kW/C]	T_{in} [C]	T_{out} [C]
H1	10.55	249	100
H2	12.66	259	128
C1	9.144	96	170
C2	15	106	270

PERIOD 2

Stream	Fc_p [kW/C]	T_{in} [C]	T_{out} [C]
H1	7.032	229	120
H2	8.44	239	148
C1	9.144	96	170
C2	15	106	270

PERIOD 3

Stream	Fc_p [kW/C]	T_{in} [C]	T_{out} [C]
H1	10.55	249	100
H2	12.66	259	128
C1	6.096	116	150
C2	10	126	250

Table 3: Minimum utility requirements for example 1

PERIOD 1

- QS=338.4 kW
- QW=432.154 kW
- Pinch point at 249-239 C

PERIOD 2

- QS= 1602.128 kW
- QW=0 kW
- No Pinch point

PERIOD 3

- QS=10 kW
- QW= 1793.146 kW
- Pinch point at 259-249 C

Table 4: Matches and heat exchanged (kW) at each period in example 1

UNIT	MATCH	PERIOD 1	PERIOD 2	PERIOD 3
1	S-C2	338.4	1602.128	10 *
2	H2-C2	126.6	0	0
3	H1-C1	676.656	676.656	207.264
4	H1-C2	817.934	89.832	200
5	H2-C2	1177.066	768.04	1030
6	H1-W	77.36	0	1164.686
7	H2-W	354.794	0	628.46

* Line denotes division between subnetworks.

Table 5: Data for example 2

PERIOD 1

Stream	Fc_p [kW/C]	T_{in} [C]	T_{out} [C]
H1	8.79	160	110
H2	10.55	249	138
H3	14.77	227	106
H4	7	271	146
C1	7.62	96	160
C2	6.08	116	217
C3	15	140	250

PERIOD 2

Stream	Fc_p [kW/C]	T_{in} [C]	T_{out} [C]
H1	7.032	160	110
H2	8.44	249	138
H3	11.816	227	106
H4	7	271	146
C1	9.144	96	160
C2	7.296	116	217
C3	18	"140	250

PERIOD 3

Stream	Fc_p ficW/C]	T_{in} [C]	T_{out} [C]
H1	10.548	160	110
H2	12.66	249	138
H3	17.724	227	106
H4	8.4	271	146
C1	6.096	96	160
C2	4.864	116	217
C3	12	140	250

Table 6: Minimum utility requirements for example 2

PERIOD 1

- QS=11 kW
- QW= 1531.96 kW
- Pinch point at 249-239 C

PERIOD 2

- QS=231.36 kW
- QW=347.424 kW
- Pinch point, at 150-140 C

PERIOD 3

- QS=0 kW
- QW=2925.856 kW
- No pinch point

Table 7: Matches and heat exchanged (kW) at each period in example 2

UNIT	MATCH	PERIOD 1	PERIOD 2	PERIOD 3
1	S-C3	11	231.36	0
2	H4-C3	154 *	0	0
3	H4-C3	693	677.6	641.872
4	H1-C2	178.72	70.32	0
5	H2-C1	152.4	182.88	60.96
6	H2-C2	407.36	491.472	83.136
7	H2-C3	232.1	161.208	111.04
8	H3-C3	559.9	909.832 *	567.088
9	H1-C2	0	152.704	0
10	H3-C1	335.28	402.336	329.184
11	H4-C2	28	22.4	408.128
12	H1-W	260.78	128.576	527.4
13	H2-W	379.19	101.28	1150.124
14	H3-W	891.99	117.568	1248.332

* Line indicates division between subnetworks

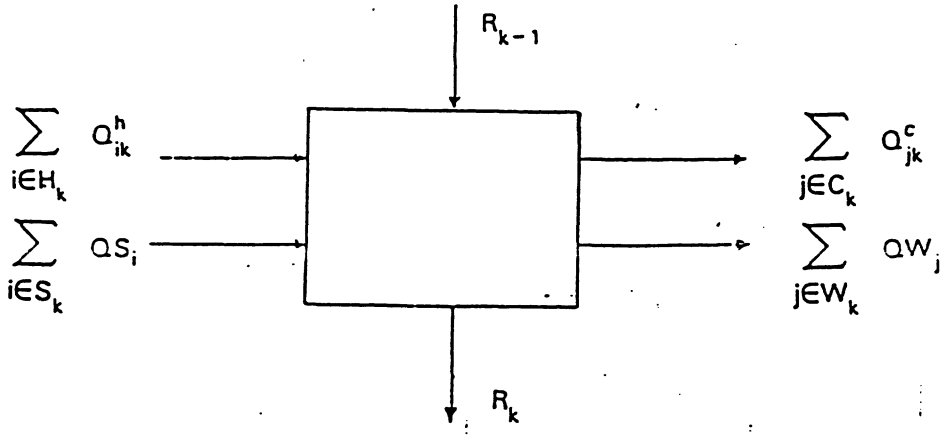

a) Interval k for (LP) transshipment model

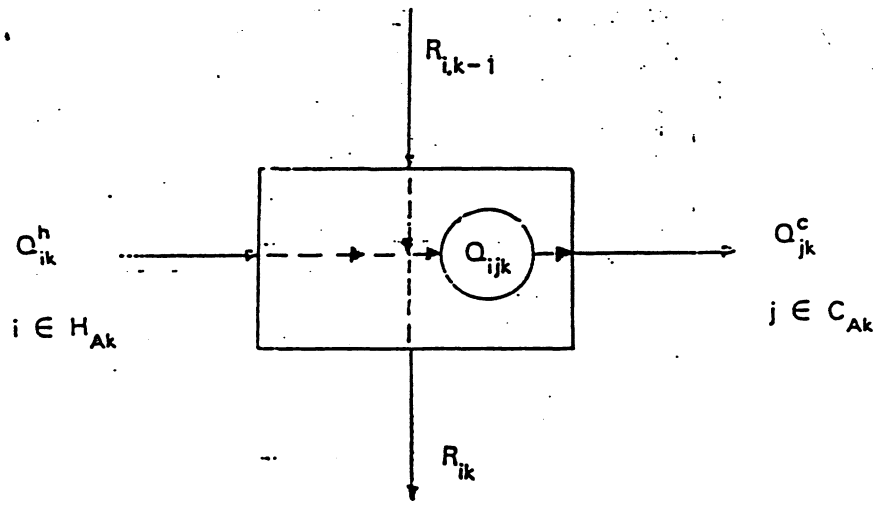

b) Interval k for (MILP) transshipment model

Figure 1: Intervals for heat balance in transshipment models

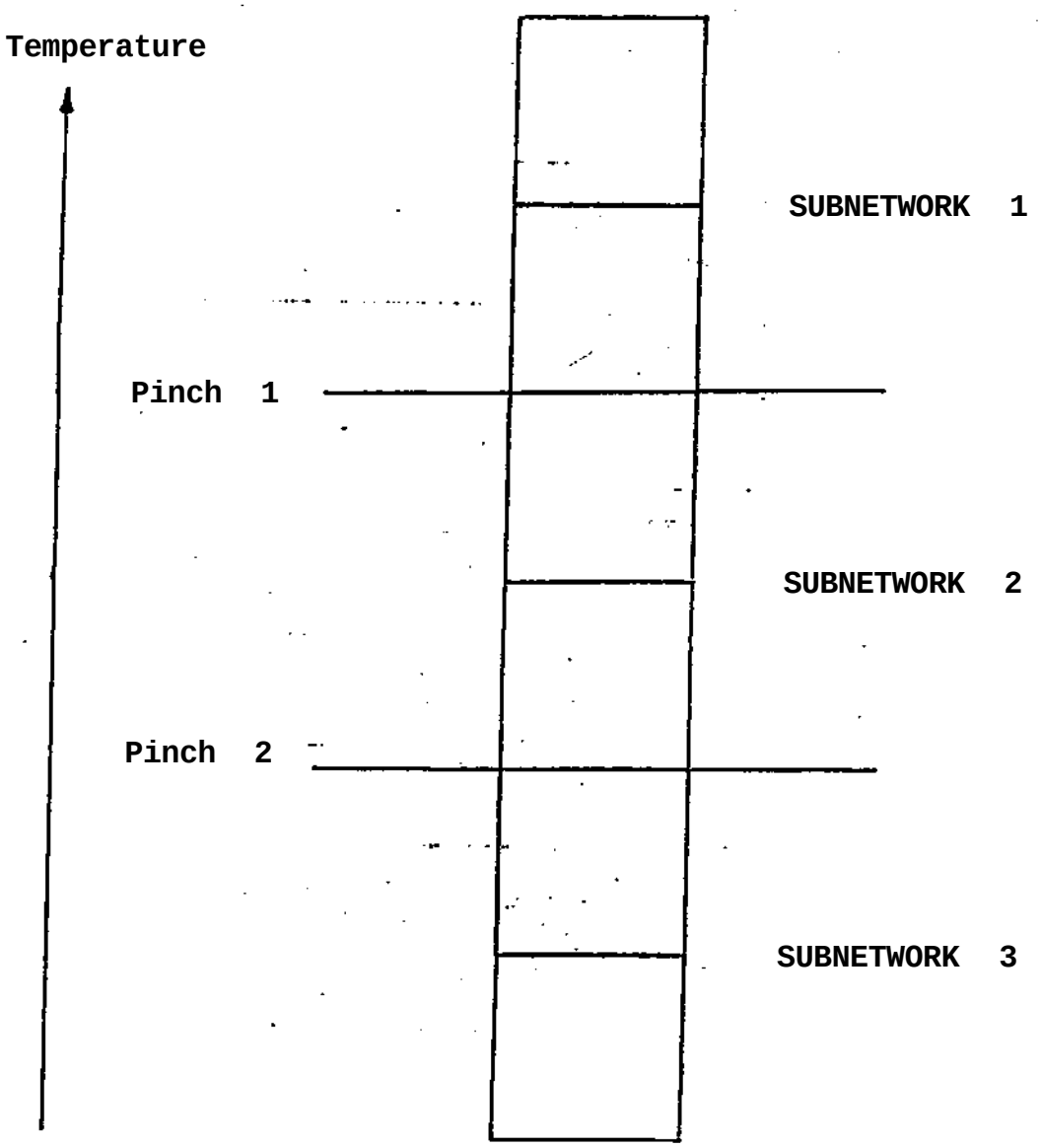

Figure 2: Partitioning of temperature intervals into subnetworks

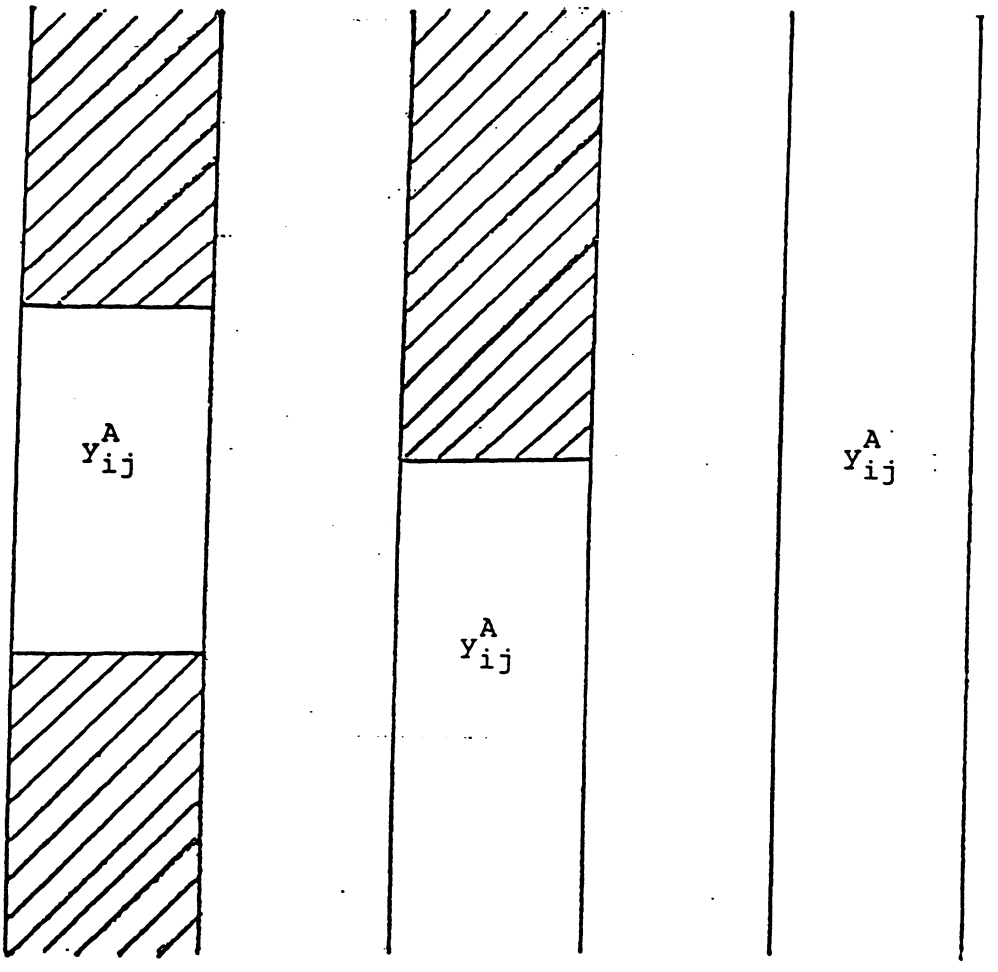

Figure 3: Example for match (i, j) satisfying condition A

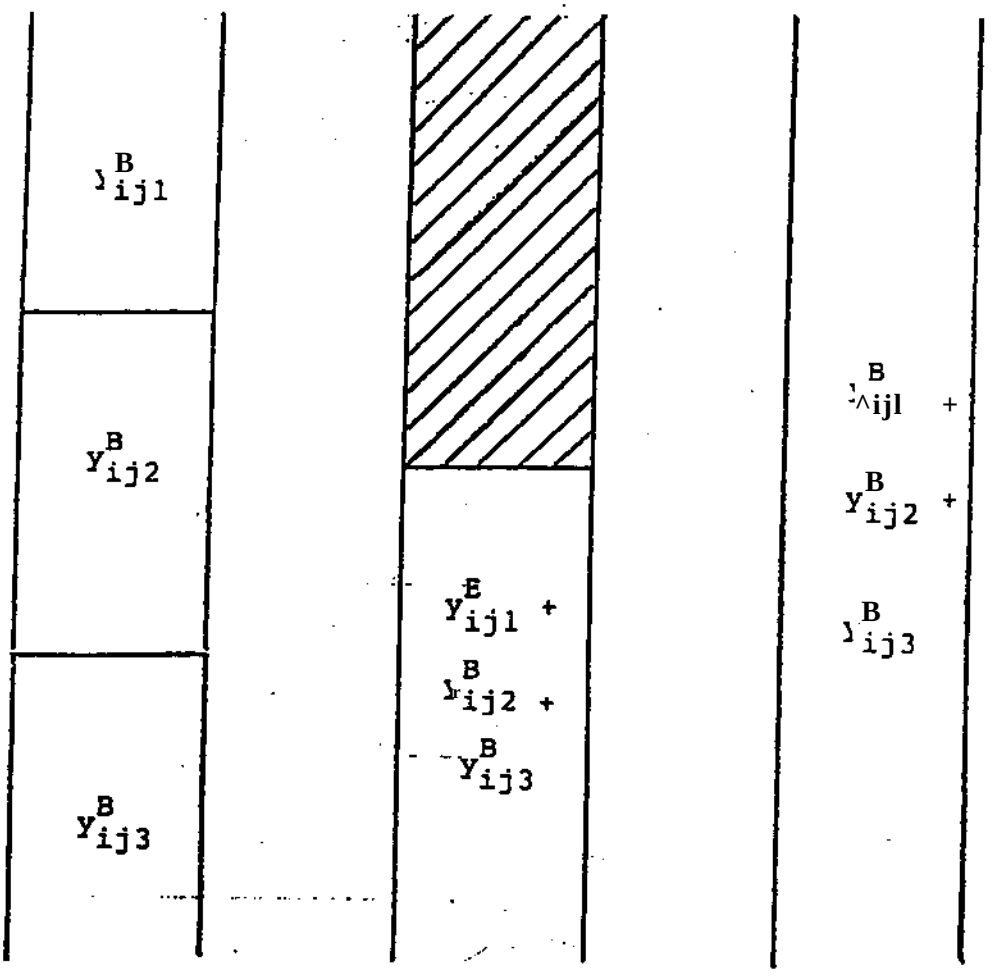

Figure 4: Example for match (i, j) satisfying condition B

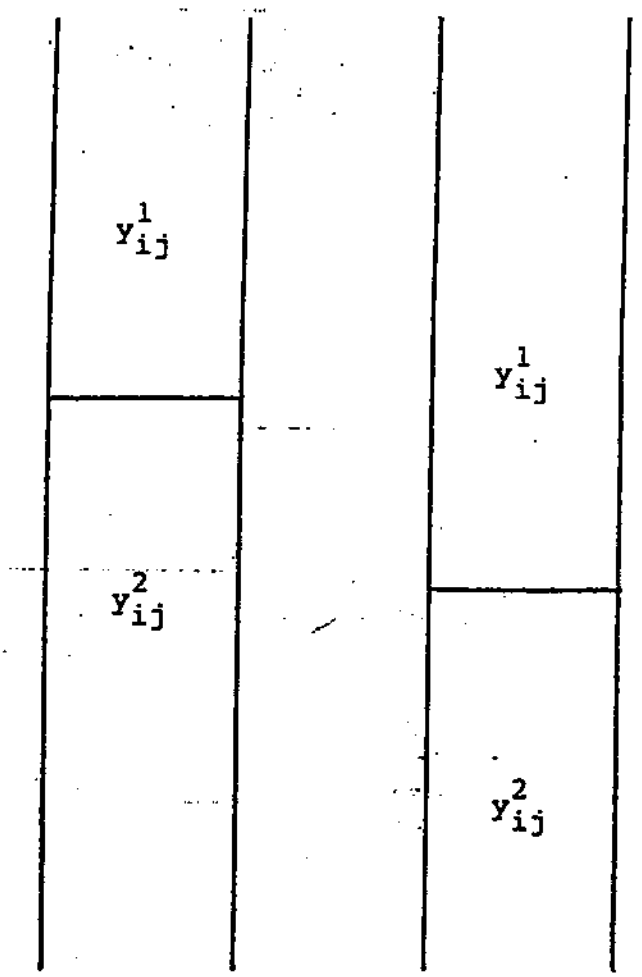

Figure 5: Example for match (i,j) not satisfying conditions A and B with reduced number of binaries

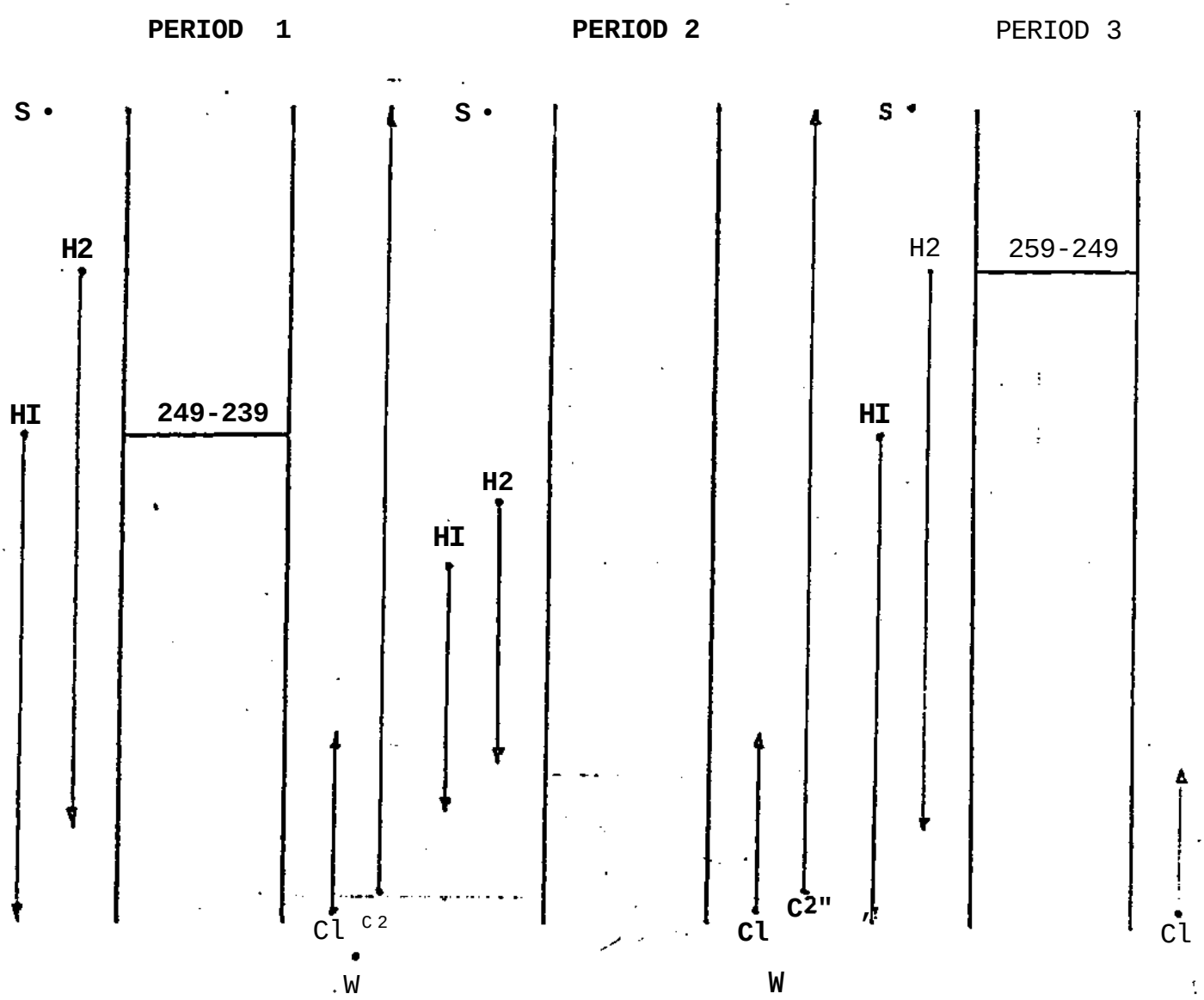

Figure 6: Streams and subnetworks for example 1

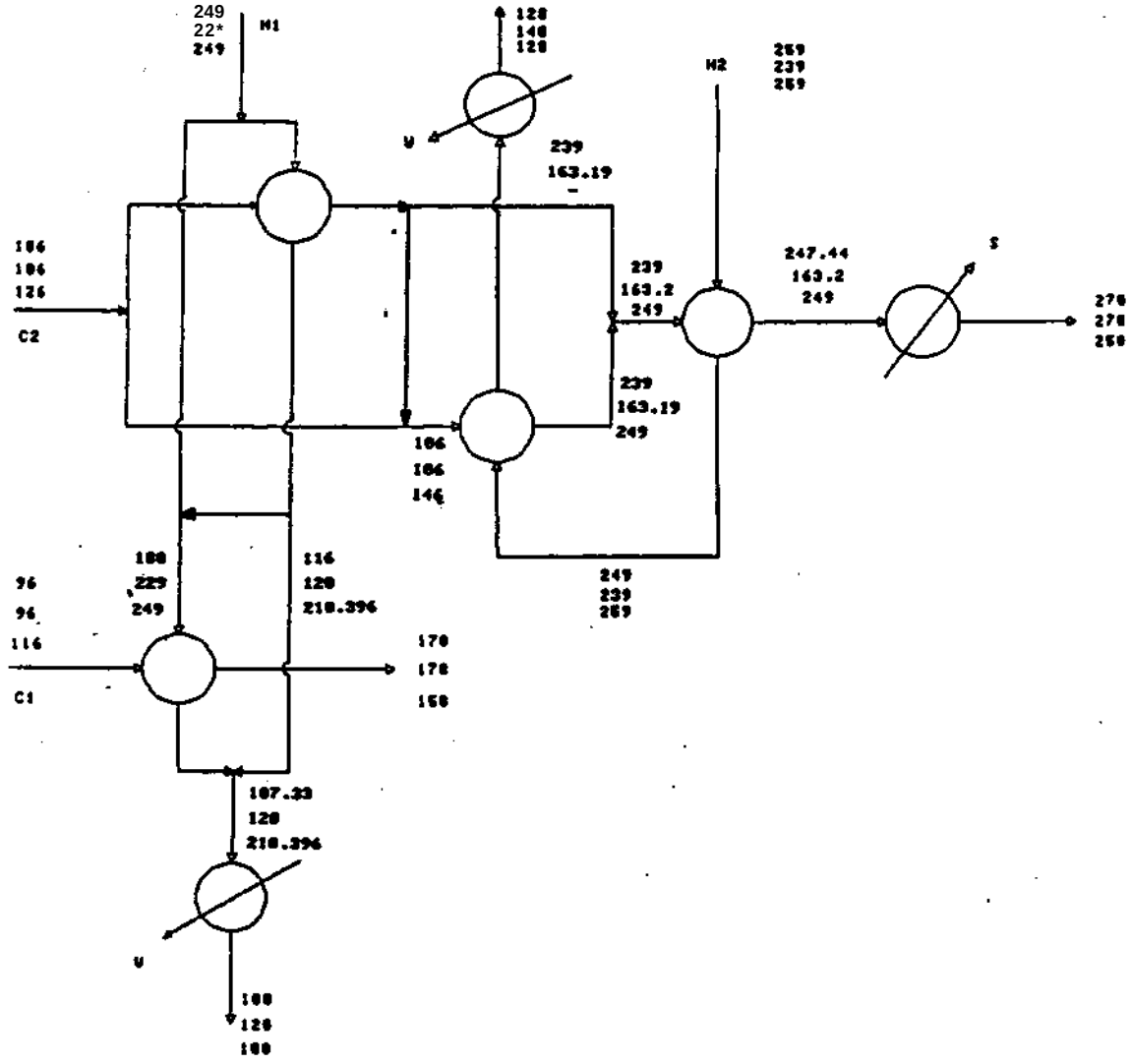

Figure 7: Network configuration for example 1

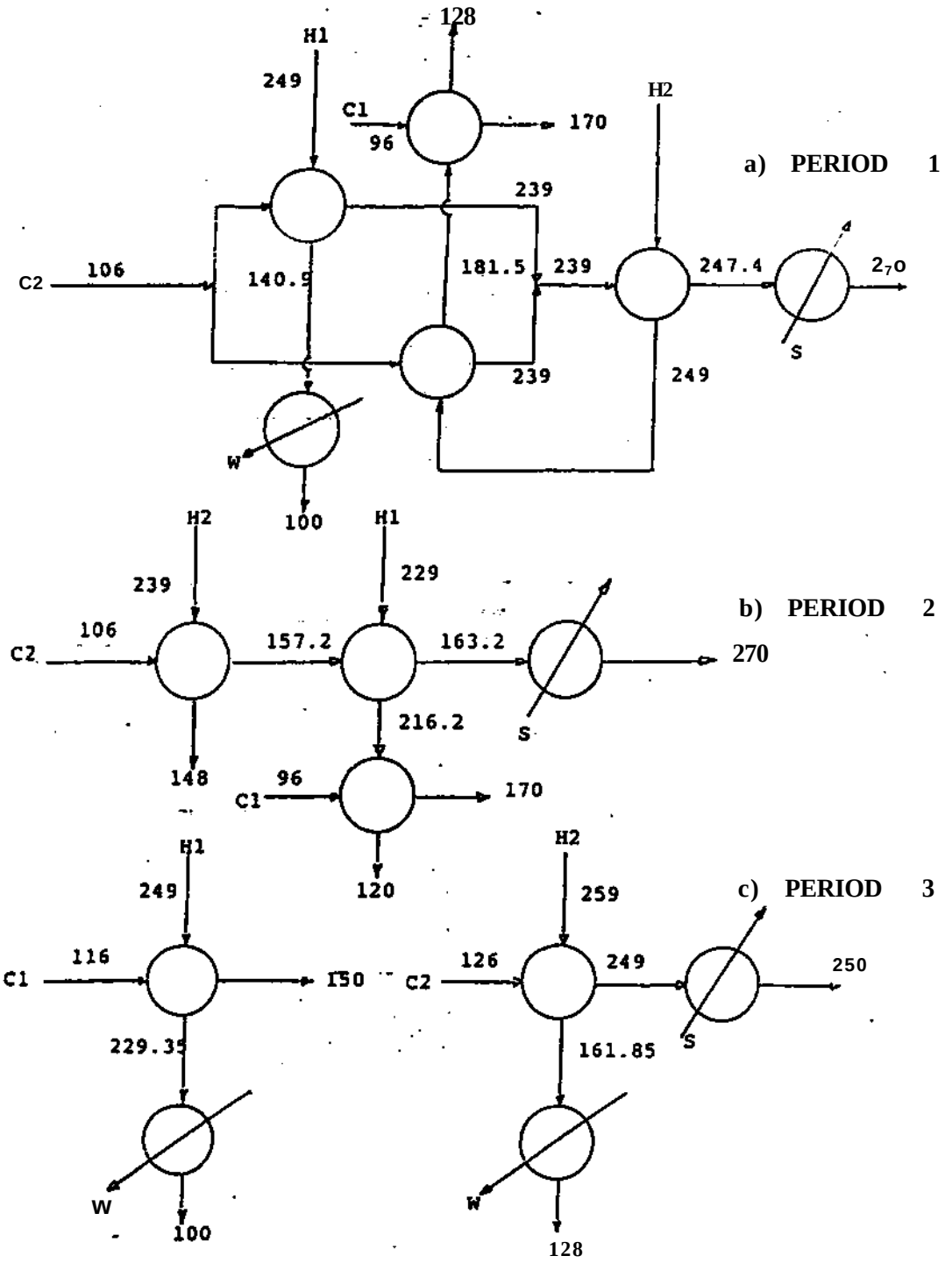

Figure 8: Independent networks for example 1

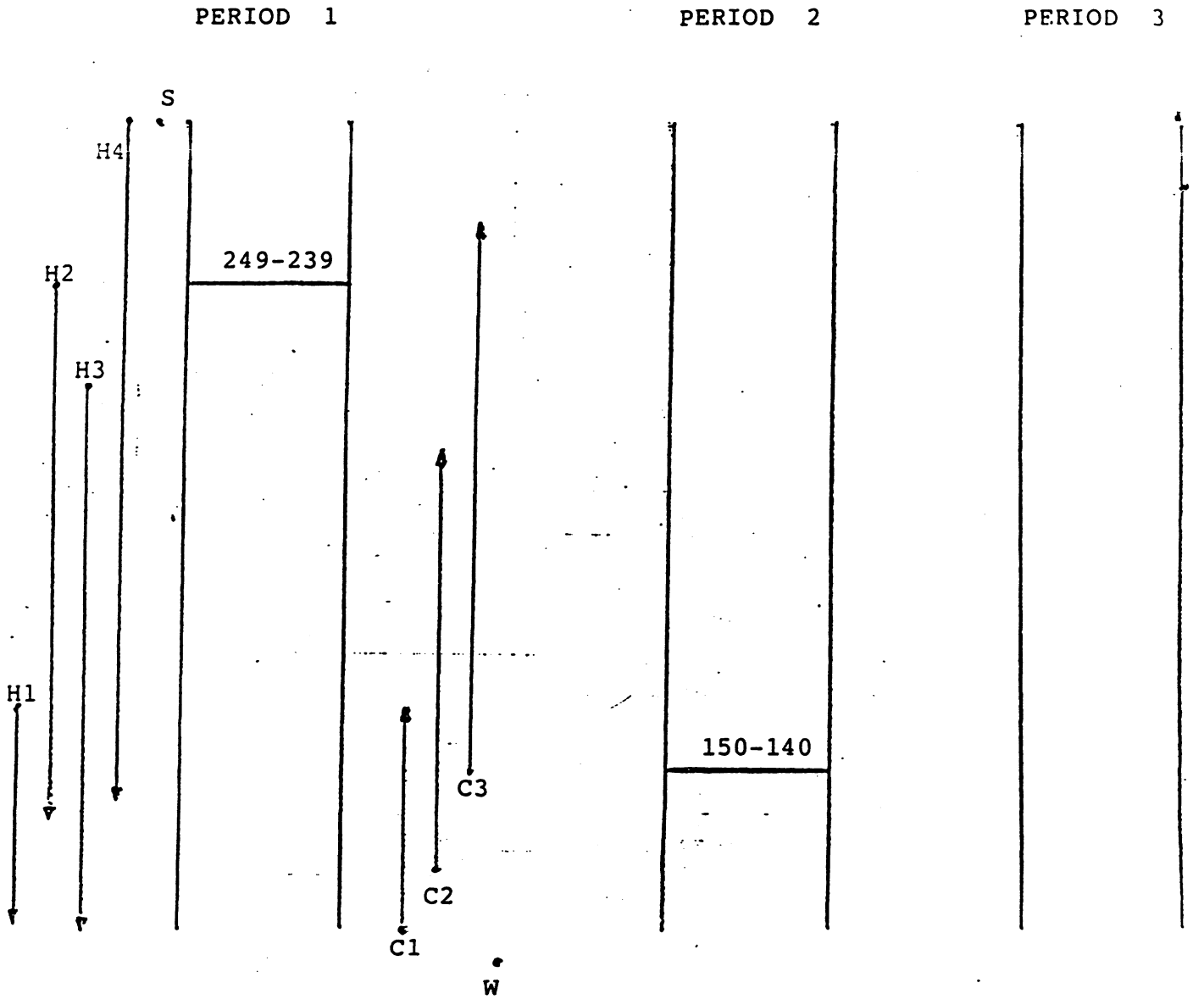

Figure 9: Streams and subnetworks for example 2

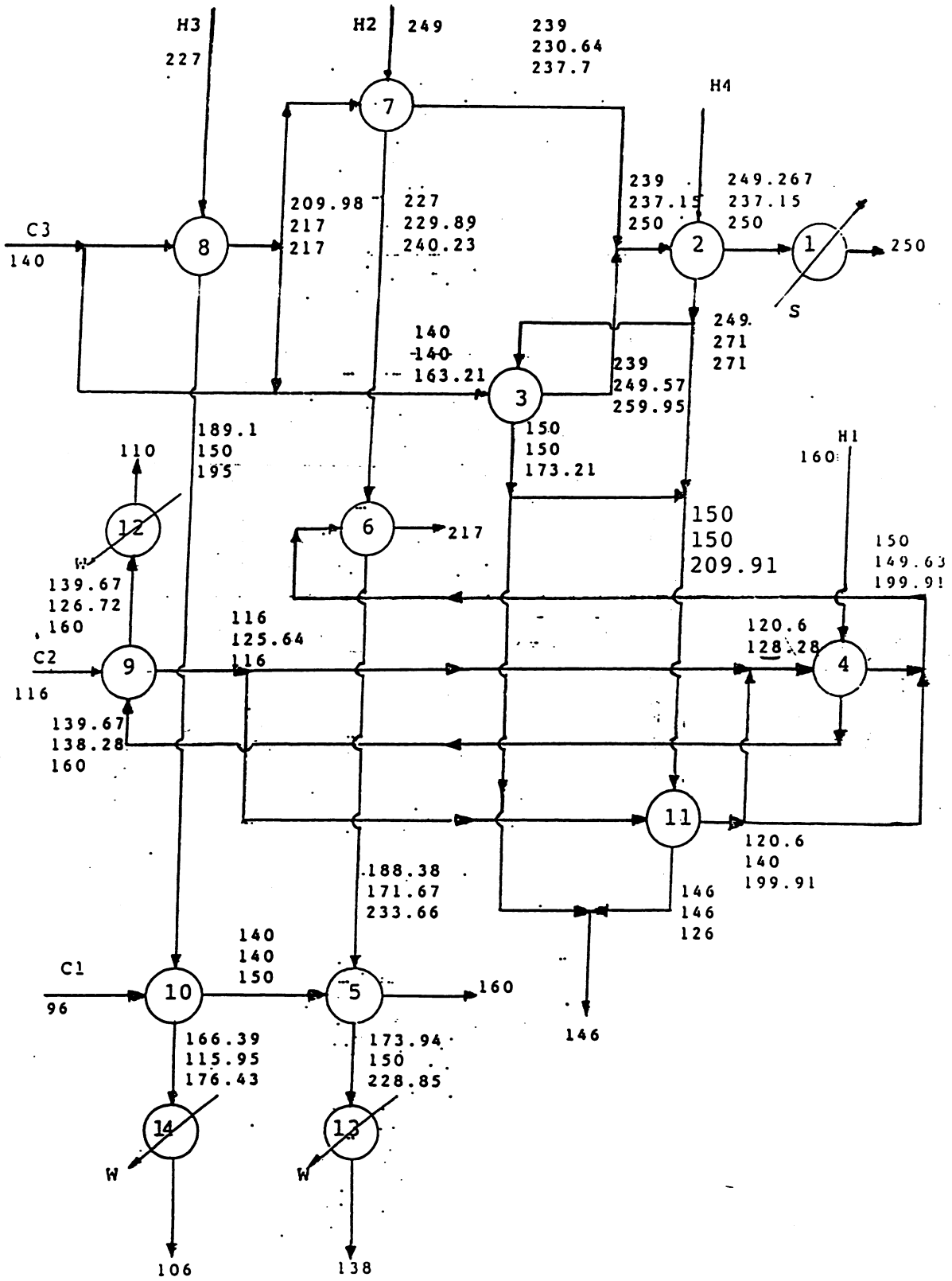

Figure 10: Network configuration for example 2