Research on Hierarchy Architecture of Digital Library E-Support

Zhang Jilong Cheng Weihua
(Fudan University, Shanghai China, 200433)

Abstract: This article analyses the challenges and tasks of Digital Library. Focus on the library's internal IT support management and based on the example of Fudan University, the author gives E-Support concept and divides the IT support architecture of digital library into three levels: the reader service and management platform, the library staff IT service platform and the technician service and management platform, which form a complete, hierarchy technical support system of digital library.
Keywords: Digital library, E-Support, Support architecture;

1. Background

With the rapid development of modern information technologies, internet goes everywhere. Traditional libraries have also benefit from these: resort to these new network technologies, massive resources in libraries have developed greatly. Digital resources increase continually, various types of library management systems and web-based databases come into force, and these have taken great convenience to the readers. With the digital technologies, readers now can visit all the library resources conveniently, even at home. Although the establishment of digital library has provided a variety of high-performance, real-time information services for teachers and students, it also takes more challenges to the IT support department of the library. On one hand, information-based library can greatly expand the daily business of traditional library; on the other hand, the failures of the information system can also influence the daily business seriously. How to deal with these threats brought about by the system vulnerability? How to control and minimize the risk of the informatization? How to improve the quality of the IT support service and ensure the reliability of the information system? How to improve the satisfactory degree of the teachers and students to the library's digital environment?

These are all the huge challenges that the librarians have to face.

2. The "E-Support" Concept

With the popularization of the concept and application of digitization in library, information services for the teachers and students are gradually increasing in terms of quantity and variety. Meanwhile, information technology itself is growing rapidly, new technologies, new demands and new applications emerge endlessly, which makes technical staff of library IT support department have to go all out to learn new technologies and develop new applications in order to keep pace with the trend and meet customer's needs. These dual pressures often make most of the IT staff be in a quandary: not only must they do the time-consuming and trivial work of user technical support and maintain the daily running of the network and the existing various information systems, but also they must learn new technologies and developing new applications. Thus, one

person often plays several roles, and his personal expertise is difficult to be rapidly accumulated and trained, and his work efficiency is significantly restricted. On a higher level, this also limits digital library for further innovation and development. Therefore, we must establish a comprehensive IT technical support system, liberate IT technical staff and improve IT service quality.

From the urgent needs and great challenges, this paper propose library "E-support" concept based on the current situations and objectives of the library. Library "E-support" is the layered IT technology security architecture which considering users as the core and using the modern computer and network technology in order to increase the accessibility of digital library resources and the serviceability of integrated library management system, as show in figure 1.

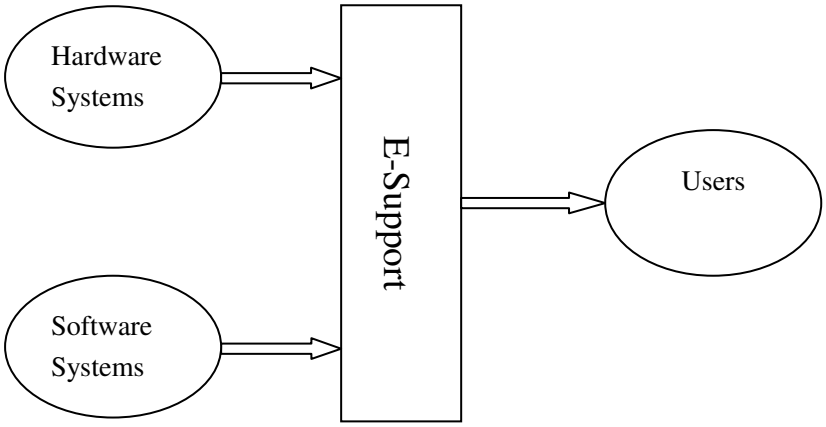

Figure 1: library "E-support" architecture

3. Analysis and design of "E-support" requirements

3.1 "E-support" architecture

According to the scope of the duties of library IT technology support department, the duties mainly cover three aspects: firstly, ensuring stable running of all digital resource systems and providing services for common readers. The number of such systems is large, and which is the core of the library work. Secondly, offering IT support to library staff, solving and tracking all kinds of system bugs, network problems and computer hardware failures that library staff meet or find out. Finally, promoting professional skills of internal technical support staff, monitoring all kinds of systems effectively and solving all types of failures timely, which finally improve the emergency response capacity and the service level.

Thus, based on the above three aspects of the duties, we must emphasize on building three types of digital platforms by using the advanced information technology. The three platforms are as follows:

3.1.1 Management Platform for Reader Services

As an example, currently there are more than 20 systems and databases in Fudan University library: ALEPH500 system, Super Star Digital Library system, METALIB, Fudan Dissertation Authorizing and Submitting System, system of reference books of Fudan University, access control system, Golden Disk Library System, the website of China academic instruction and reference information center(CAIRIC), the full-text database system of China academic reference books of CALIS, the local system of China academic instruction and reference information system of CALIS, directory search system for ancient books, the website of China Society of Indexers, Publications of the republican period, Founder Apabi digital resource platform, system of special collections, new books bulletin, Union Catalog of Import Journals subscribed by academic libraries in China, Founder Desi Ebook-maker system, the full-text book-maker system of teaching reference books, CASHL Document Delivery System, and so on.

Platform features: The customers of the above systems are common readers. These systems are the daily-work platform of all the library departments, which are the core systems of digital library. Except the system of special collections, the system of new books bulletin, the system of Union Catalog of Import Journals subscribed by academic libraries in China and the full-text book-maker system of teaching reference books, which are developed by library IT department, all other systems are provided by the software product vendors. It is the vendors that provide the technical support mainly and the library IT department is only responsible for the daily maintenance, including collecting problems and cooperating vendors to fix the bugs timely. This type of work require us to focus on maintenance work of ensuring the stable running of the systems, monitoring the running state of the systems and taking the initiative to identify problems and restore services.

3.1.2 Technical Support Platform for Library Staff

This platform is mainly to solve the problems reported by the library staff when they use those web-based database systems mentioned in section 3.1.1, to fix the hardware and software failures and to communicate all the library internal departments. It is composed of three subsystems:

1. The platform for the internal business of library: including the information publication system of internal affairs, librarians' BBS and other internal service and management systems;
2. The hardware problems reporting and tracking platform: used to report various hardware failures, such as PC, servers and network.
3. The system-bugtracker platform: reporting the existent problems, new and modified requirements of those above more than 20 systems and databases, assigning tasks to solve those problems and tracing the bug-solving process. It can resolve the inefficiency in solving problems caused by the reasons such as duplication of reporting, lack of transparency in the bug-solving process, unable tracing and monitoring, etc.

Platform features: The above three subsystems are used by the library staff. This platform manages the failures about software, hardware and systems found by the library staff. Its aim is to efficiently resolve the problems of systems and hardware devices which are reported by the staff.

3.1.3 Project Management and System Monitoring Platform for libraryIT Department

This platform is mainly used for two aspects. One is to improve the internal management level of the IT Department, the technical coordination capacity and the team-working capacity. The other is to automatically monitor various types of computer and network environments and alarm when problem happens, including the running environment of network, systems and databases, computer room environment (including temperature and humidity, water leakage, UPS power monitoring, computer room security, etc.). Its aim is to greatly enhance the work-efficiency, to improve the capabilities of identifying and solving failures, and to ensure system run securely and stably. The platform mainly consists of three subsystems:

1. ***Documents sharing and management platform:*** based on SHARE POINT technology, this platform is constructed for the IT department to manage the technology document. Its aim is to control the versions of various technical documents during the progress of the projects, so that the internal technical communications in the department can be promoted to create the conditions for A/B roles. Meanwhile, it can also effectively protect library's various kinds of technical documents to ensure sustainable development.
2. ***Systems and network monitoring platform:*** monitoring the running status of systems and network in order to improve the current adverse situation that the staff cannot identify failures timely and passively wait for users to report. Resort to this platform, the staff can take the initiative to identify problems. Its aim is to gradually construct an early-failure-warning and security-ensuring system.
3. ***Computer room environment monitoring platforms:*** monitoring power and air-condition environment of computer room initiatively. The occurrence of anomalies can be automatically detected and reported initiatively. Resort to this platform, the staff can remotely and centralizedly manage the distributed computer room, which makes it convenient to monitor abnormities in the computer room and remove the hidden troubles timely.

Platform features: The platform is for the staff of library IT department. It can enhance the effectiveness of internal technical communication by using document sharing platform; It also can improve the capability of identifying problems by using the monitoring platform about systems, network and computer room environment. Its aim is to enhance the emergency-response capacity and to strengthen the security systems. It can release the IT support staff greatly.

3.2 The Hierarchical Structure of E-Support Platform

The managed objective of library E-support platform have covered all web-based database systems, all resource-maker tools and all integrated management systems in library. This security system implements the object-oriented initiatively-management model through the hierarchical and progressive "3+3" management platform. This structure is shown in Figure 2.

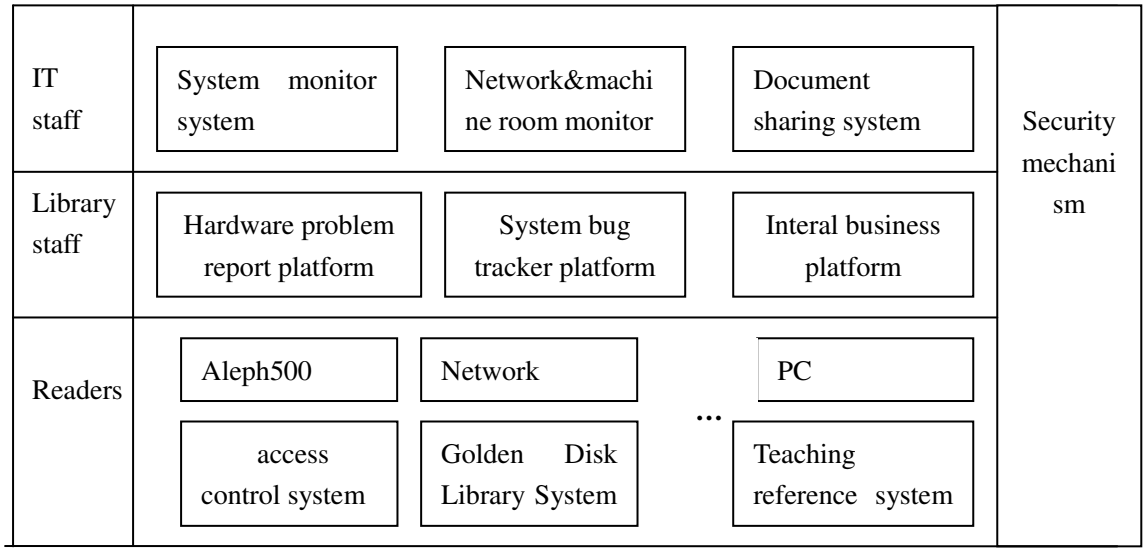

Figure2 The structure of E-Support

Based on object-oriented perspective, Figure 2 shows the structure of library E-Support, which has three layers to describe the outline of library's IT support architecture. The security mechanism, such as the operation process, rules and regulations, are on the right. The systems, in the middle, are to the platform's three layers respectively. The corresponding clients are on the left. According to the clients, the three layers are as follows from bottom to top.

Readers layer: this layer includes computer equipments, network ports and all application systems for common readers and library's staff, such as integrated library management system(Aleph500), teaching reference system, access control system, etc. They are the core systems of the library's custom-oriented services.

The library staff layer: this layer includes the hardware problems reporting platform, the system-bugtracker platform and the platform for the internal business of library. The hardware problems reporting platform deals with all the PC and network failures in the readers layer; the system-bugtracker platform deals with all the systems' bugs and modified requirements in the readers layer; and the platform for the internal business of library provides librarians BBS, notice bulletin, work summary, and so on.

IT staff layer: this layer consists of system monitoring system, network/machine room environment monitoring system and the technical documents sharing platform. Its aim is to release IT staff and improve efficiency by automatically monitoring and managing the business process.

4. Conclusion

Based on the object-oriented perspective, we design the library IT support services architecture, which change the concept of focusing all on the service systems to common users directly. It also changes the passive situation of IT stuff and helps us organize the business idea clearly. By using information technologies, we have designed and developed systems for the common staff, especially for the IT staff. We take those regular and repetitive daily management

works to software tools, which greatly release the IT staff and change the working model from passive serving to initiatively identifying, and thus will greatly improve the efficiency and the service quality.

At present, the Fudan University library is doing the initial attempt based on such idea. It has established the hardware problems reporting platform, the system-bugtracker platform and the platform for the internal business of library, and it is developing the various types of monitoring systems combined with the expansion of machine room. The practice has proved that the development of these platforms is playing more and more important role in the work of library.

REFERENCES

1. Shugan, and Steven M , "The Impact of Advancing Technology on Marketing and Academic Research." *Marketing Science*, Vol. 23 Issue 4, 2004, pp.469-475.
2. Hailin Zhu, "IT Service：Management、Control and Processes." China Machine Press 2006.7
3. Inform-IT, "Foundations of IT Service Management Based on ITIL V3."Van Haren Publishing,2007.9